Roll-A-Shutter®

8/50 & 6, 8, 10, 12/100 Series

Spring & Direct Lift Series & B&D Storm-Shield™

installation instructions **PART NO: 9233**

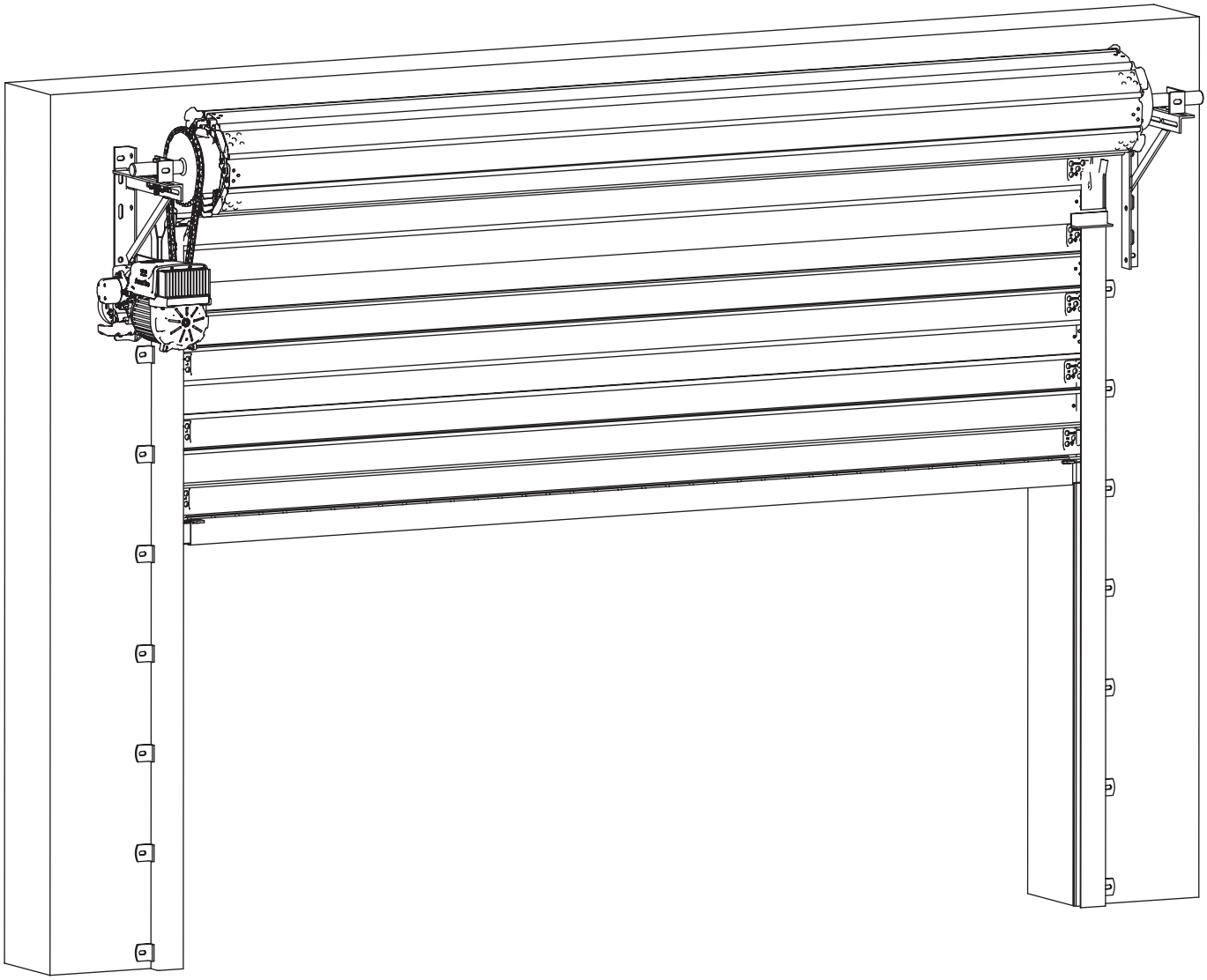

These instructions are intended for professional garage door installers. All references are taken from inside looking out.

PART NO: 9233. REVISION 3 - APRIL 2017

www.bnd.com.au

contents

1.0 before you start

1.1 safety checklist

The following hazards and hazard controls have been identified for installers during the installation of this door.

hazard	control
• Housekeeping - **risk of slip trip or fall** • Housekeeping - **risk of injury to other people** or animals in the installers work area	• Tidy up site prior to start work as a minimum area should be at least the area of the installation back into the garage and 2 metres in front • If the site housekeeping is deemed to be unsafe do not install the door • Keep all people well clear of installers work area with appropriate signage and discussion with owner
• Manual or mechanical handling when moving the door from the Trailer or Ute to the installation area - **risk of musculoskeletal injury** • Manual or mechanical handling when installing Doors & Openers particularly above head height - **risk of musculoskeletal injury or twisting** • Manual or mechanical handling when installing tracks and torsion bars - **risk of musculoskeletal injury** • Manual or mechanical handling when installing the door opener - **risk of musculoskeletal injury or twisting** • Ensure product is secured to mechanical lifting device	• Correct lifting technique for Roller Door/Shutter • Use of 2 person lifts • Use of mechanical aids such as lifting stands, forklift, cranes • Avoid twisting (practice correct lifting techniques) • Correct use of ladders while installing tracks • Use of correct technique of knotted rope installation aids • Use of correct slings, spreader bars etc.
• Working at heights and working with ladders, scissor lifts, scaffold - **risk of fall from height**	• Ladder check • Ladder placement • Do not work off the top rung
• Sharp edges on Door, tracks or related jewellery - **risk of laceration**	• Wear appropriate PPE (Dyneema cut off gloves) • Follow instruction explicitly particularly for the installation of some parts of the doors as the unrolled cut out edges presents a very sharp edge
• Pinch points - **risk of cut, puncture or crush injury**	• Wear appropriate PPE and keep hands well clear of pinch points • Ensure hands well clear of the panels
• Use of hand tools - **risk of eye injury, laceration cut stab or puncture injuries (Tools checklist)** • Use of Electric/ Battery or pneumatic tools - **noise hazard** • Use of cutting tools creating sparks - **risk of fire**	• Wear appropriate PPE and utilise operators manual • Use appropriate noise/hearing protection in the form of ear plugs or ear muffs • Ensure appropriate fire protection available and housekeeping to ensure that flammable liquids or materials are removed from the area of work
• Tension spring - **risk of release of stored energy (various door parts, tools, jewellery striking installer on the head or body)**	• Ensure door is correctly secured • Ensure that pipe wrench is fitted correctly to the axle and if it is gripped onto the axle do not underestimate the tension in the spring when undoing the clamps • Ensure the correct length pipe wrench, bars or other equipment is utilised • Ensure correct bolts are tightened or loosened to ensure there is no release or controlled release of energy from the spring through the pipe wrench • Keep hands clear of the pipe wrench at all times • Keep head clear of the pipe wrench at all times
• Position the door on the brackets, there is a risk of the **door falling from the brackets** striking a person	• Ensure the door is immediately fastened to the bracket with the "U" Bolt • Ensure no-one ever walks under a door sitting on a bracket

1.2 preparation

Check the opening dimensions to ensure you have the correct door size. Check floor and lintel levels and the jambs are plumb from the lowest side or from the side with the least headroom. Position the drum in front of the opening so that the drum tube (excluding the gear wheel) is exactly in the centre of the opening. Check the width of the curtain with the width of the opening and ensure that when the fixing holes in the curtain are lined up with the fixing studs on the drum, the curtain overlaps an equal distance on each side of the opening. Check that the headroom and sideroom clearances are in accordance with those shown on the relevant door chart.

1.3 requirements before installation

B&D Roll-A-Shutters® are normally installed to operate behind the opening, overlapping as shown on Fig. 1.3.1. Openings should therefore have sufficient return on both sides to accommodate the support brackets and door guides, with necessary working clearances.

The door is supported on brackets above the opening at each end and requires headroom for the door to roll up (see the relevant door chart). Piers or door posts must extend beyond the top of the opening to provide fixing for the support brackets.

It is preferable that lintels (or 'heads') be built flush with the back of the door jambs. This avoids an excessive gap between door and lintel while allowing clearance to prevent the door rubbing against the lintel.

WARNING! No guarantee will be given or responsibility accepted by the manufacturers if the door is not installed as instructed.

For satisfactory door operation please follow the instructions carefully.

Figure 1.3.1: general drum and curtain arrangement

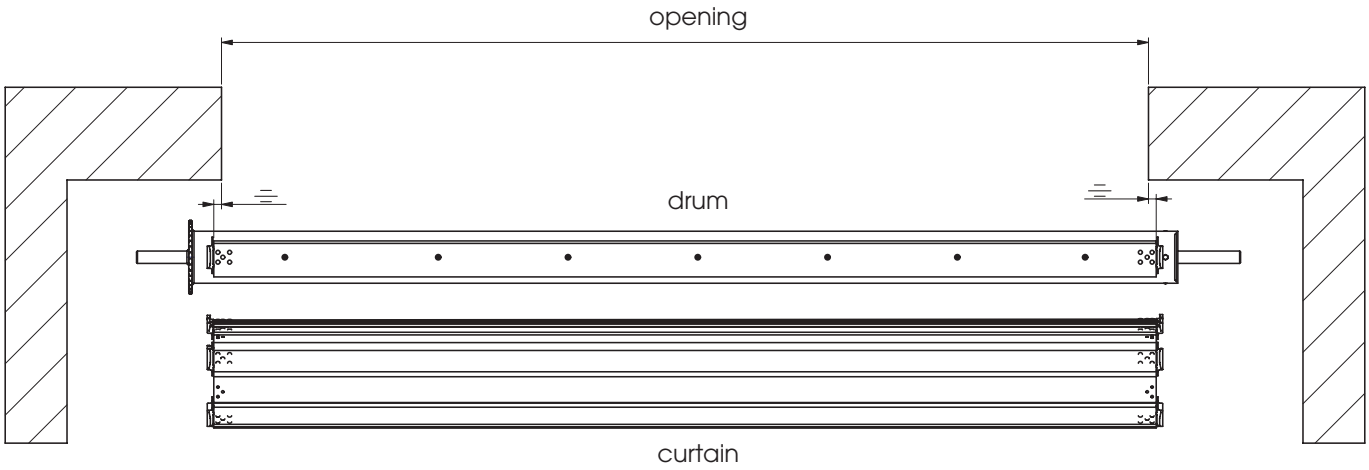

1.4 tools

The following tools are needed to install Roll-A-Shutter® 6, 8, 10 & 12/100 Series.

- personal safety equipment
- comprehensive tool kit
- selected electric tools
- magnetic drill press
- electric welder
- lifting straps
- heavy duty rope
- scissor lift
- forklift
- crane
- chain blocks
- spring tensioning bars

2.0 installation

2.1 shipping weights

crating

all doors should be crated when delivered by rail. Similar packing is recommended when transporting by road for long distances, or at any time when there is any likelihood of damage during handling and transportation. An additional fee applies.

A variety of packaging options are available, such as: cardboard, semi-circular hardboard packaging and foam wrap. Additional fees apply (POA). Other types of crates have been used for special purposes, including timber export cases.

weights

Due to the considerable variation in door weights, weights shown are intended to be used for guidance only and not taken as exact figures. Intermediate sizes can be approximated from the sizes listed. The weights include all fittings normally supplied with the particular size door.

Roll-A-Shutter® 8/50 steel gs

uncrated weight

	width								
height	600	1200	1800	2400	3000	3600	4200	4800	5000
600	20	30	60	90	110	140	170	200	210
900	30	50	80	110	140	170	200	230	240
1200	40	70	110	140	180	220	260	300	315
1500	50	90	130	160	200	270	310	360	375
1800	60	110	140	180	220	280	330	380	395
2100	70	120	150	190	230	290	340	390	405
2400	80	120	160	200	240	290	340	390	405
2700	90	130	170	220	260	300	350	400	415
3000	100	140	180	230	270	320	360	410	425
3300	110	150	190	240	290	340	380	430	450
3600	120	160	200	250	300	350	400	450	470
3900	130	180	220	270	320	370	420	480	500
4200	140	180	230	280	330	390	440	500	520
4500	150	200	240	300	350	410	460	520	540
4800	160	210	250	300	360	420	480	540	565
5000	165	220	260	315	375	440	500	565	585

crated weight

	width							
height	600	1200	1800	2400	3000	3600	4200	4800
600	30	55	92	130	160	200	240	280
900	40	75	112	150	190	230	270	310
1200	50	95	142	180	230	280	330	380
1500	60	115	162	200	250	330	380	440
1800	70	135	172	220	270	340	400	460
2100	80	145	182	230	280	350	410	470
2400	90	145	192	240	290	350	410	470
2700	100	155	202	260	310	360	420	480
3000	110	165	212	270	320	380	430	490
3300	120	175	222	280	340	400	450	510
3600	130	185	232	290	350	410	470	530
3900	140	205	252	310	370	430	490	560
4200	160	205	262	320	380	450	510	580
4500	170	225	272	340	400	470	530	600
4800	180	235	282	340	410	480	550	620

all weight shown in kilograms

Roll-A-Shutter® 6/100 steel gs

uncrated weight

	width									
height	1800	2400	3000	3600	4200	4800	5400	6000	6600	7000
1800	117	150	184	218	252	285				
2100	120	160	190	225	260	295				
2400	134	170	201	253	268	302				
2700	145	180	215	255	285	325	340	360	395	420
3000	150	193	226	268	302	345	360	380	420	445
3300	160	210	240	285	325	360	380	400	440	465
3600	175	218	260	302	345	380	400	440	485	515
3900	180	225	275	315	360	400	420	470	515	550
4200	193	235	278	327	378	420	450	510	560	595
4500	205	250	290	340	395	435	480	560	615	655
4800	218	268	302	352	411	453	520	600	660	700
5100			330	420	480	550	630	690	760	805
5400			345	430	490	570	660	710	780	830
5700			380	450	510	590	680	730	805	850
6000			410	480	550	620	700	780	860	910

crated weight

	width							
height	1800	2400	3000	3600	4200	4800	5400	6000
1800	149	190	234	278	322	365		
2100	152	200	240	285	330	375		
2400	166	210	251	313	338	382		
2700	177	220	265	315	355	405	430	460
3000	182	233	276	328	372	425	450	480
3300	192	250	290	345	395	440	470	500
3600	207	258	310	362	415	460	490	540
3900	212	265	325	375	430	480	510	570
4200	225	275	328	387	448	500	540	610
4500	237	290	340	400	465	515	570	660
4800	250	308	352	412	481	533	610	700
5100			390	480	550	630	720	790
5400			405	490	560	650	750	810
5700			440	510	580	670	770	830
6000			470	540	620	700	790	880

all weight shown in kilograms

Roll-A-Shutter® 8/100 steel gs

uncrated weight

	width									
height	1800	2400	3000	3600	4200	4800	5400	6000	6600	7000
1800	140	180	220	260	300	340				
2100	150	190	230	270	310	350				
2400	160	200	240	280	320	360				
2700	170	210	250	290	330	370	420	500	550	585
3000	180	230	270	320	360	410	450	530	585	620
3300	190	240	290	340	380	430	470	560	615	655
3600	210	260	310	360	410	450	510	580	640	675
3900	220	270	320	370	420	480	540	610	670	710
4200	230	280	330	390	450	500	570	640	705	745
4500	250	310	350	410	460	520	600	660	725	770
4800	260	320	360	420	490	540	630	690	760	805
5100			380	430	500	570	660	720	790	840
5400			410	450	510	590	680	740	815	865
5700			430	480	540	620	710	770	845	900
6000			460	510	570	650	730	850	935	990

crated weight

	width							
height	1800	2400	3000	3600	4200	4800	5400	6000
1800	172	220	270	320	370	420		
2100	182	230	280	330	380	430		
2400	192	240	290	340	390	440		
2700	202	250	300	350	400	450	510	600
3000	212	270	320	380	430	490	540	630
3300	222	280	340	400	450	510	560	660
3600	242	300	360	420	480	530	600	680
3900	252	310	370	430	490	560	630	710
4200	262	320	380	450	520	580	660	740
4500	282	350	400	470	530	600	690	760
4800	292	360	410	480	560	620	720	790
5100			430	490	570	650	750	820
5400			460	510	580	670	770	840
5700			480	540	610	700	800	870
6000			510	570	640	730	820	950

all weight shown in kilograms

Roll-A-Shutter® 10/100 steel gs

uncrated weight

	width								
height	**2400**	**3000**	**3600**	**4200**	**4800**	**5400**	**6000**	**6600**	**7000**
2400	240	290	340	380	430	480	530	580	615
2700	250	300	360	410	460	510	560	620	655
3000	260	320	370	430	480	540	600	650	690
3300	280	340	390	450	500	570	630	680	720
3600	290	350	410	470	530	590	660	720	800
3900	300	370	430	490	560	620	680	810	850
4200	320	380	450	520	580	650	710	840	1075
4500	330	400	470	540	600	670	810	880	1120
4800	340	420	490	560	630	700	840	1240	1265
5100	360	430	510	580	650	720	870	1290	1315
5400	370	450	520	600	680	750	900	1330	1355
5700	390	470	540	620	700	770	930	1350	1395
6000	400	480	550	630	710	800	950	1410	1450

crated weight

	width								
height	**2400**	**3000**	**3600**	**4200**	**4800**	**5400**	**6000**	**6600**	**7000**
2400	280	340	400	450	510	570	630	690	750
2700	290	350	420	480	540	600	660	730	790
3000	300	370	430	500	560	630	700	760	830
3300	320	390	450	520	580	660	730	790	860
3600	330	400	470	540	610	680	760	830	960
3900	340	420	490	560	640	710	780	920	990
4200	360	430	510	590	660	740	810	950	1310
4500	370	450	530	610	680	760	910	990	1360
4800	380	470	550	630	710	790	940	1350	1400
5100	400	480	570	650	730	810	970	1400	1450
5400	410	500	580	670	760	840	1000	1440	1490
5700	430	520	600	690	780	860	1030	1460	1540
6000	440	530	610	700	810	915	1075	1520	1620

all weight shown in kilograms

Roll-A-Shutter® 12/100 steel gs

uncrated weight

	width								
height	**2400**	**3000**	**3600**	**4200**	**4800**	**5400**	**6000**	**6600**	**7000**
2400	269	325	381	426	482	538	594	650	689
2700	280	336	403	459	515	571	627	694	734
3000	291	358	414	482	538	605	672	728	773
3300	314	381	437	504	560	638	706	762	806
3600	325	392	459	526	594	661	739	806	896
3900	336	414	482	549	627	694	762	907	952
4200	358	426	504	582	650	728	795	941	1204
4500	370	448	526	605	672	750	907	986	1254
4800	381	470	549	627	706	784	941	1389	1417
5100	403	482	571	650	728	806	974	1445	1473
5400	414	504	582	672	762	840	1008	1490	1518
5700	437	526	605	694	784	862	1042	1512	1562
6000	448	538	616	706	795	896	1064	1579	1624

crated weight

	width								
height	**2400**	**3000**	**3600**	**4200**	**4800**	**5400**	**6000**	**6600**	**7000**
2400	314	381	448	504	571	638	706	773	840
2700	325	392	470	538	605	672	739	818	885
3000	336	414	482	560	627	706	784	851	930
3300	358	437	504	582	650	739	818	885	963
3600	370	448	526	605	683	762	851	930	1075
3900	381	470	549	627	717	795	874	1030	1109
4200	403	482	571	661	739	829	907	1064	1467
4500	414	504	594	683	762	851	1019	1109	1523
4800	426	526	616	706	795	885	1053	1512	1568
5100	448	538	638	728	818	907	1086	1568	1624
5400	459	560	650	750	851	941	1120	1613	1689
5700	482	582	672	773	874	963	1154	1635	1725
6000	493	594	683	784	907	1025	1204	1702	1814

all weight shown in kilograms

2.2 compliance

PLEASE ENSURE YOU ARE COMPLYING TO THE LATEST DETAILS

We have also been granted DTCM certification for the below B&D products in accordance with the National Construction Code. To download the latest DTCM drawings visit their product page on our website www.bnd.com.au where you will be directed to the DTCM website.

Series 1 (R1D, R1F, R1R, R1M, R1ME)
Series 2 (R2I, R2W, R2F)
Windpanel Tracklock (WTG 2, 3, 4)
Roll-A-Shutter (6/100, 8/100, 10/100, 12/100)

The NT Deemed To Comply Manual (DTCM) is referenced in the Building Code of Australia.

2.3 generic guidence (label attached to product)

Roll-A-Shutter®

DOOR OPENING HEIGHT [mm]	DRUM SIZES – DIMENSION "X" CENTRE LINE OF DRUM TO WALL			
	6" (168)	8" (219)	10" (273)	12" (324)
2000	210	230	235	261
3000	235	248	260	286
4000	250	255	284	287
5000	260	277	292	306
6000	280	293	306	325
7000	300	305	315	330
8000		315	327	348
9000		323	347	349
10000		339	350	355

AL (axle above lintel) = X + 200mm

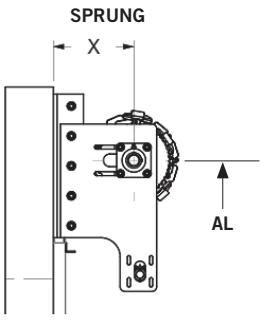

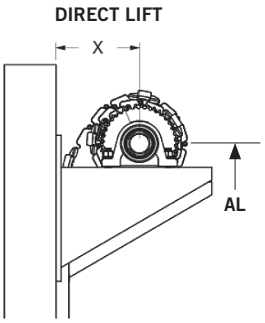

HEAVY 2 PERSON

ATTENTION!
THIS BRACKET MAY REQUIRE A 2 PERSON LIFT

PHONE 1800 636 407
www.bnd.com.au

Doors & Openers®
THERE'S SO MUCH MORE BEHIND A B&D DOOR

Part No.: RS0435

2.4 bracket combinations

Bracket's are indicative only, as the gear or motor bracket can be installed on the L/H or R/H side.

Figure 2.4.1

8" and 10" drum hand chain or opener bracket

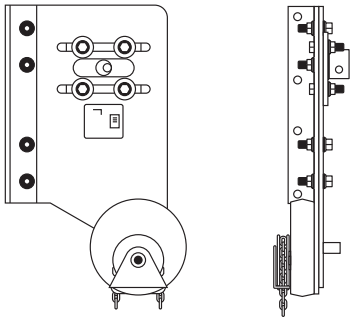

Figure 2.4.3

8" and 10" drum tail end bracket

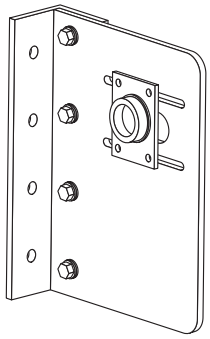

Figure 2.4.2

8" and 10" drum tail end bracket

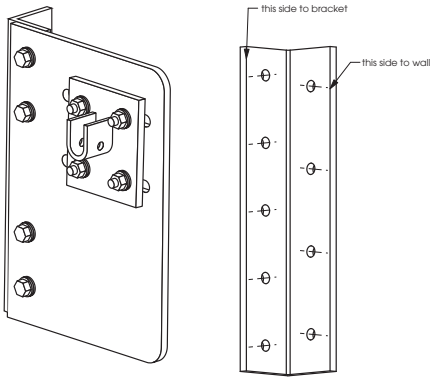

Figure 2.4.4

8" and 10" drum hand end or opener bracket

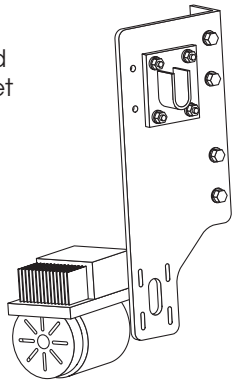

Figure 2.4.5

8" and 10" drum opener above lintel bracket

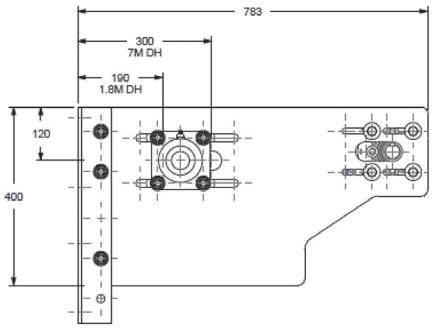

Figure 2.4.6

6" drum mounting brackets

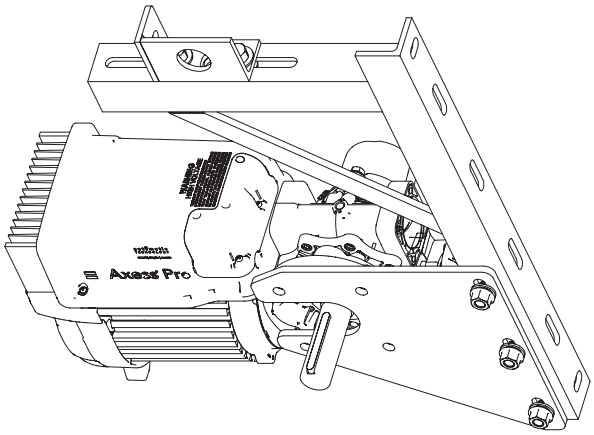

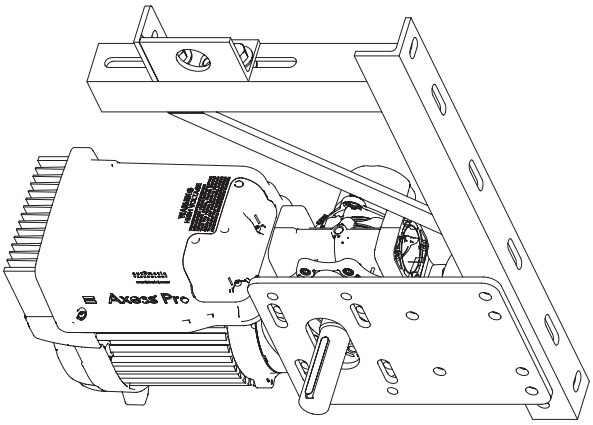

2.5 setting out and attaching the bracket angles (sprung drums)

1. Now that the brackets have been selected and the 75 x 75mm angles unbolted from them, their positions can be calculated and marked out at each side of the lintel. The schematic drawing detail for this is set out on page 13 or use the following method.
2. Using appropriate lifting equipment lift the drum, raise to a comfortable working height of the floor ensuring it is stable as you will need to work at each end to attach the support brackets. For sprung drums the R/H end is marked with a white label.
3. The opener or manual chain bracket and the tail end bracket should be placed at each end of the drum, make sure you place each bracket at the correct end.
4. Adjust the boss attached with four nuts and bolts to the main bracket to suit the axle to bracket centre X shown on the label attached to the bracket and firmly tighten.
   NOTE: This may require further final adjustment after the door is fully installed.
5. Fit each bracket to the stub end of the axle by sliding it onto the previously adjusted boss and secure by fitting the tension bolt or method provided. This will prevent it from falling of when the axle is lifted into position.
6. To obtain the angle bracket position measure from the end of the slat to the face of the bracket for L/H and R/H end of the drum. An overall measurement should be made between the brackets to confirm the angle position.
7. These can be mounted with foot out if sideroom permits or foot in if side room is insufficient.
8. Using the measurements obtained mark out the curtain to opening overlap on the lintel it must be equal both sides. Using the end of slat to bracket measurements mark the vertical 75x75 angle position, consideration must be given to the thickness of the main bracket depending on the foot in or out position of the angle.
9. Before proceeding further check the overall measurement previously obtained. If this is correct mark a vertical line at the angle position on the lintel. Calculate the AL position from the guidance label attached to the bracket or from 2.3 label and mark he centre line of the axle the 75x75 angle height can be determined and marked on the vertical line from this.
10. The angles can be welded, bolted or masonry fixed using the correct fixings suitable for the structure and dynamic weights which will be applied to them.

Figure 2.5.1

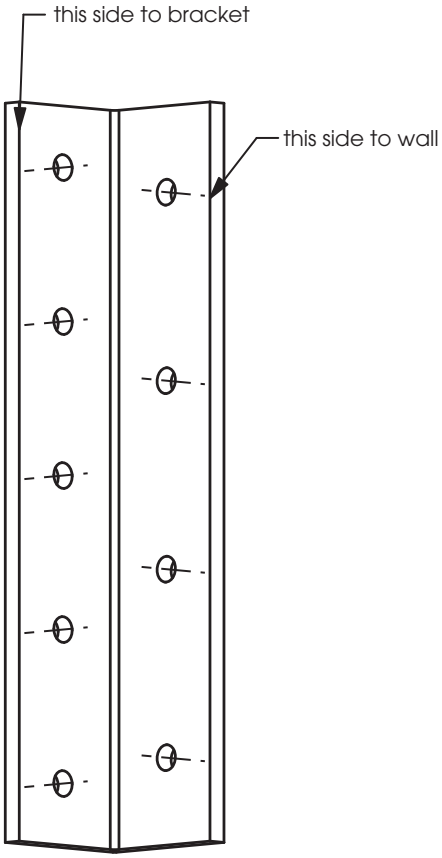

Figure 2.5.2

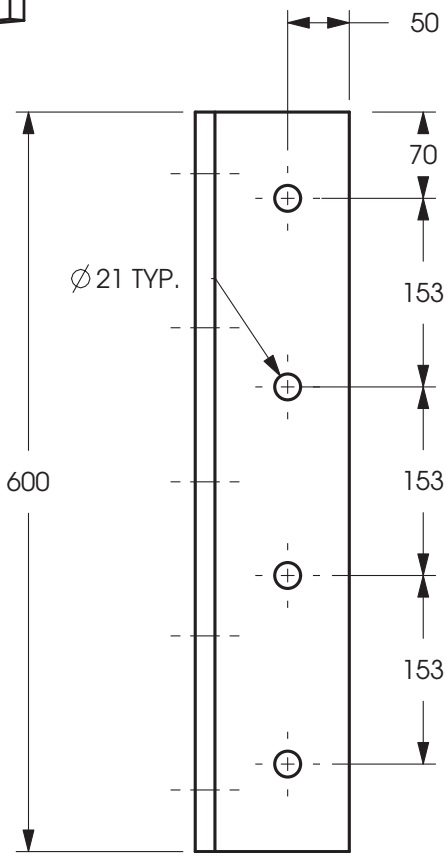

2.6 attaching brackets and fitting the sprung drum

1. The drum is now ready to be prepared for lifting into position, first remove the single slat attached to the drum, and carefully place the slat nuts and washers to one side in a safe place.
2. Using appropriate lifting equipment lift the drum/axle into position in the doorway making sure it is the correct way round and that it is equally aligned to each side jamb.
3. Ensure there is no danger of the brackets falling from the axle.
4. Now carefully lift the drum up to the height of the previously fitted angle brackets. Adjustment up down or sideways will be required to align the four holes in the flat angle bracket with the four angle bracket holes; the bolt previously fitted for safety may need removing to do this. Fit the four bolts from the doorway side ensuring the washers, spring washers and nuts are fitted and securely tightened, repeat this procedure for the other side.
5. Manual chain drive or opener should be fitted before the shutter is wound up.
   NOTE: do not fit the opener if it is inside mounted at this stage as it will interfere with lifting the curtain to the drum.
6. The small chain sprocket should be fitted but not tightened until the drive chain is fitted, align the sprockets and tension the drive chain and ensure the sprocket grub screws are tightened.
7. Fit the manual chain to the chain wheel.

For attaching the curtain go to page 27.

Figure 2.6.1

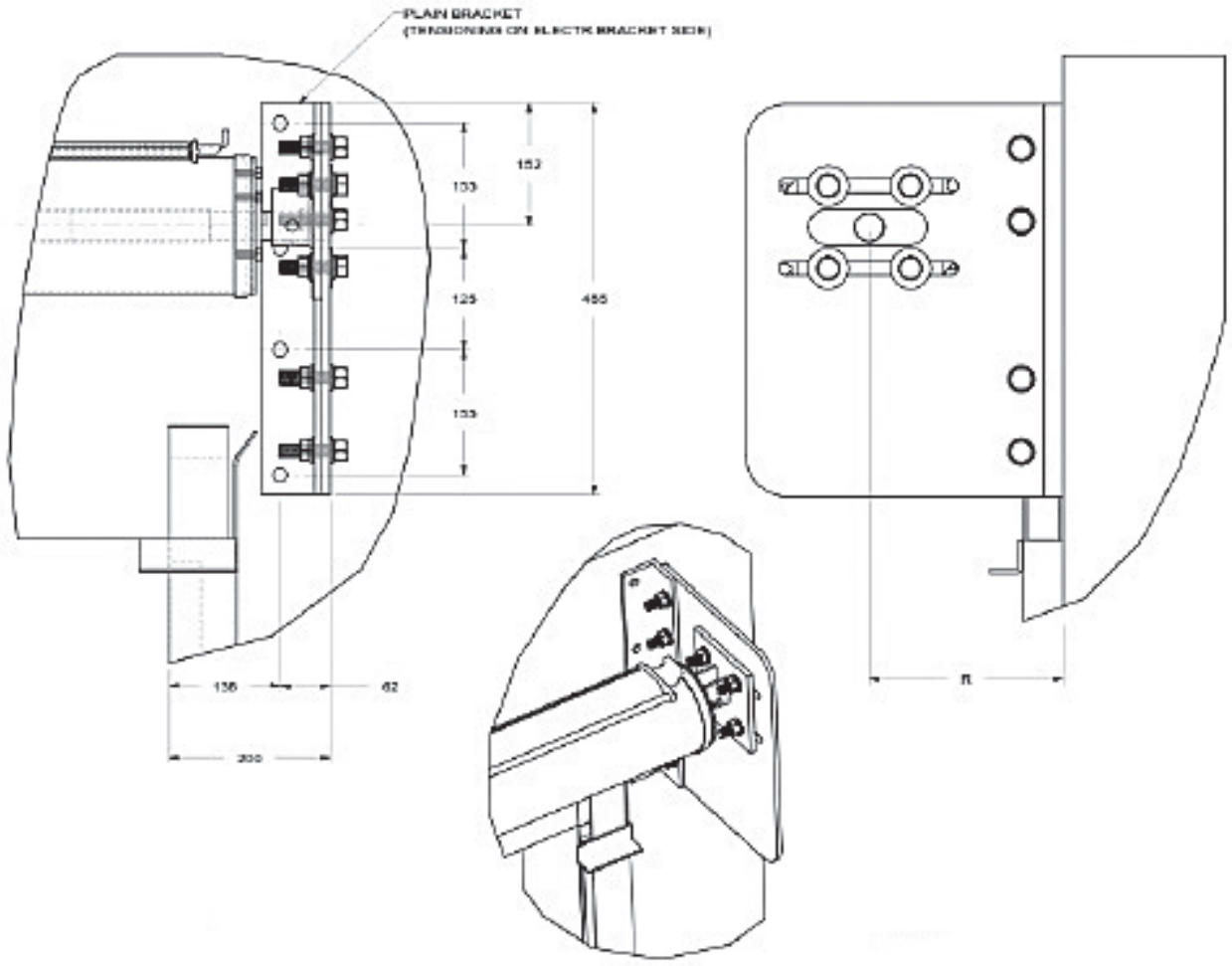

2.7 set up details for sprung drums with heavy plate brackets

6"HEAVY TYPICAL INSTALLATION LAYOUT (SPRUNG DRUM)

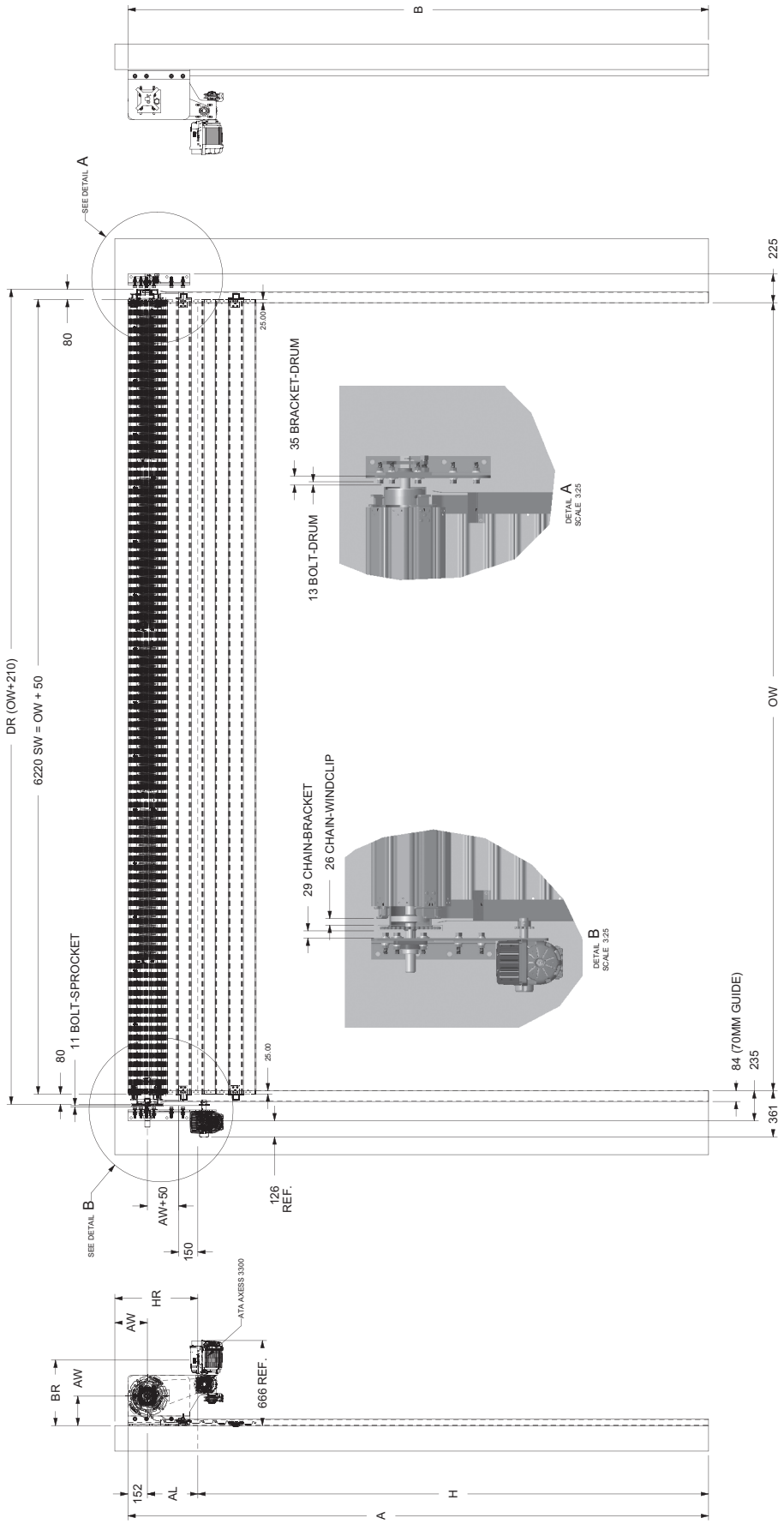

NOTE: All dimensions shown represent the **minimum recommended** clearances. If the head room dimension (H) is less than the given amount, the bottom rail of the door will intrude into the opening by the difference. (All values in mm)

OH	AW	HR (2xAW+200)	AL (AW+200)	A = B (OH+AL+152)	BR (2AW-25)
2000	190	580	390	2542	355
2500	197	594	397	3049	369
3000	203	606	403	3555	381
3500	214	628	414	4066	403
4000	225	750	425	4582	425
4500	241	682	441	5093	457
5000	245	690	445	5593	465
5500	258	712	458	6115	489
6000	262	724	462	6626	499
6500	282	764	482	7139	544

NOTE:
* OH - OPENING HEIGHT
* OW - OPENING WIDTH
* DL - DRUM LENGTH
* AW - DISTANCE FROM AXLE TO WALL
* HR - HEAD ROOM
* BR - BACK ROOM
* AL - DISTANCE BETWEEN AXLE TO LINTEL
* SW - SLAT WIDTH
* A - ELECTRIC BRACKET HEIGHT
* B - PLAIN BRACKET HEIGHT
B = A

important information on fasteners

The installer must select the appropriate fasteners to suit the type of structure and dynamic loads that will be applied to them.

2.8 setting out and attaching the 50x50 angle brackets (sprung drums)

1. The 50 x 50 angle brackets are handed and are fitted with the foot facing out. Their positions can be calculated and marked out at each side of the lintel, the schematic drawing detail for this is set out on page 16 or use the following method.
2. The opener or manual chain bracket and the tail end bracket should be placed at each side of the opening, make sure you place each bracket at the correct side.
3. To obtain the angle bracket position measure from the end of the slat and mark out the slat/curtain to opening overlap on the lintel it must be equal both sides. Using the measurements obtained from the specification page 16 Mark the face of the 50x50 bracket for l/h and r/h end of the drum. An overall measurement should be made between the brackets to confirm the angle position.
4. Before proceeding further check the overall measurement previously obtained. If this is correct mark a vertical line at the angle position on the lintel. Calculate the AL position from the guidance label attached to the bracket or from 2.3 label and mark he centre line of the axle the 50x50 angle height can be determined and marked on the vertical line from this.
5. The angles can be welded, bolted or masonry fixed using the correct fixings suitable for the structure and dynamic weights which will be applied to them.
6. Using appropriate lifting equipment lift the drum onto the brackets. For sprung drums the R/H end is marked with a white label.
7. Adjust the boss attached with two nuts and bolts to the main bracket to suit the axle to bracket centre X shown on the label attached to the bracket and firmly tighten. **NOTE:** This may require further final adjustment after the door is fully installed.

Figure 2.8.1

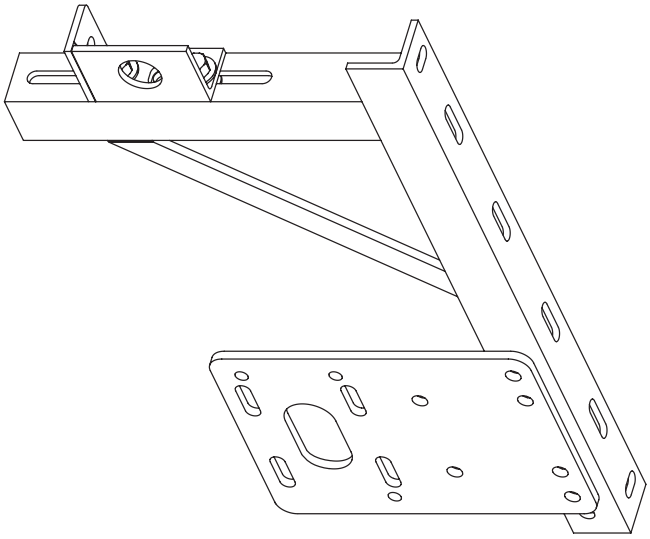

Figure 2.8.2

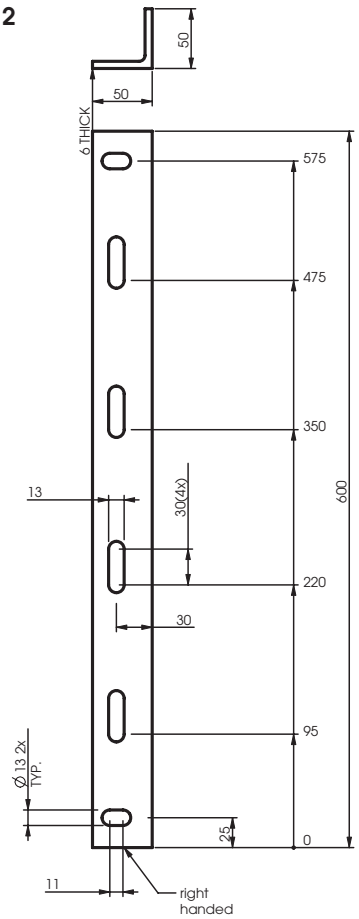

2.9 set up details for sprung drums with angle brackets

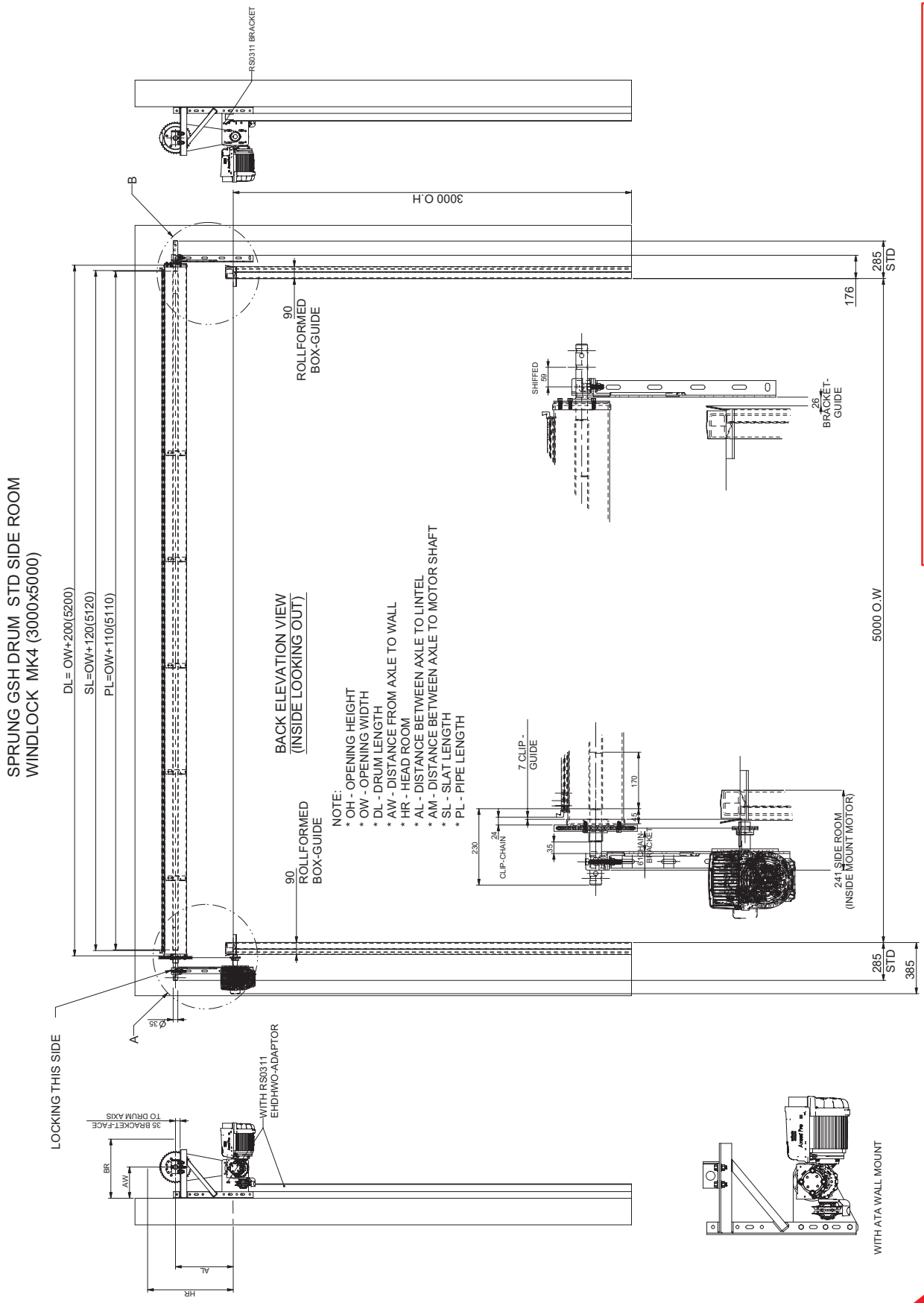

important information on fasteners

The installer must select the appropriate fasteners to suit the type of structure and dynamic loads that will be applied to them.

NOTE: All dimensions shown represent the **minimum recommended** clearances. If the head room dimension (H) is less than the given amount, the bottom rail of the door will intrude into the opening by the difference. (All values in mm)

2.10 set up details for direct lift direct drive windlocked drums

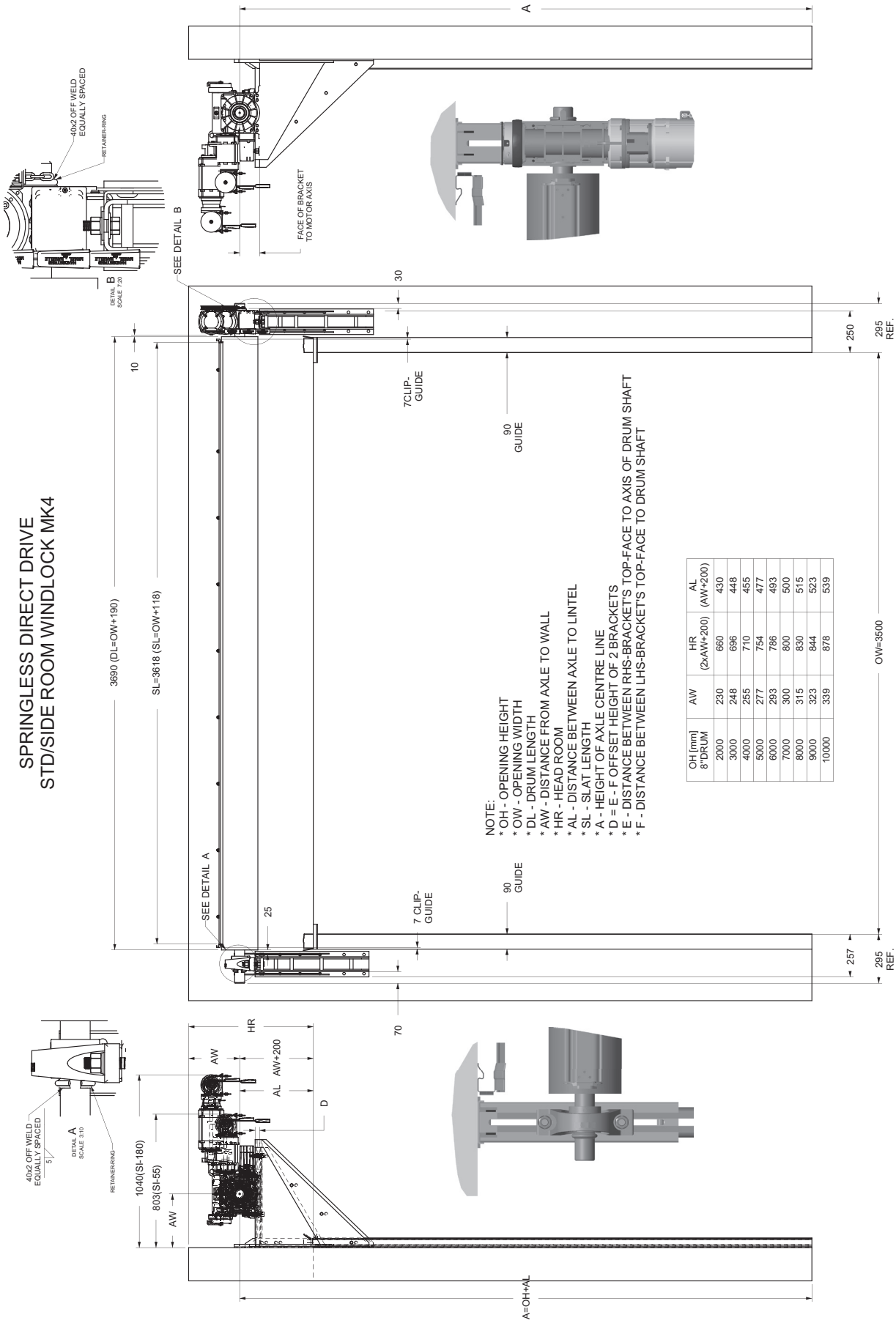

OH [mm] 8"DRUM	AW	HR (2xAW+200)	AL (AW+200)
2000	230	660	430
3000	248	696	448
4000	255	710	455
5000	277	754	477
6000	293	786	493
7000	300	800	500
8000	315	830	515
9000	323	844	523
10000	339	878	539

important information on fasteners

The installer must select the appropriate fasteners to suit the type of structure and dynamic loads that will be applied to them.

NOTE: All dimensions shown represent the **minimum recommended** clearances. If the head room dimension (H) is less than the given amount, the bottom rail of the door will intrude into the opening by the difference. (All values in mm)

SPRINGLESS DIRECT DRIVE (8" HEAVY)

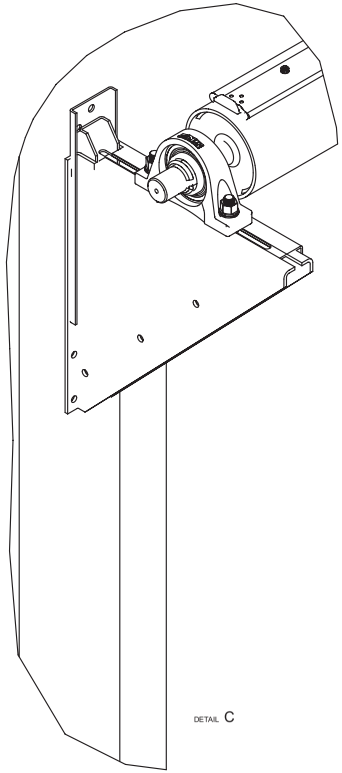

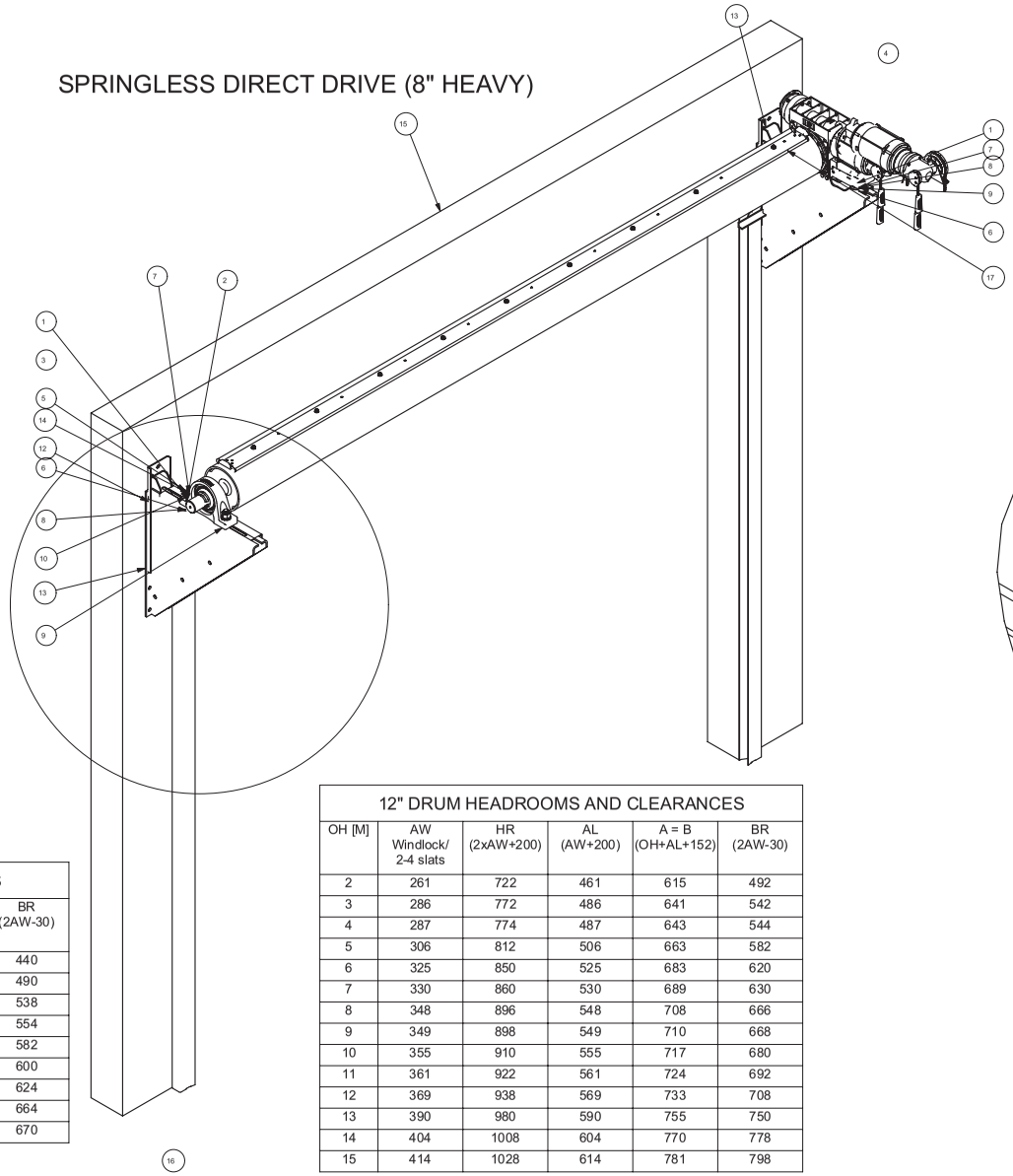

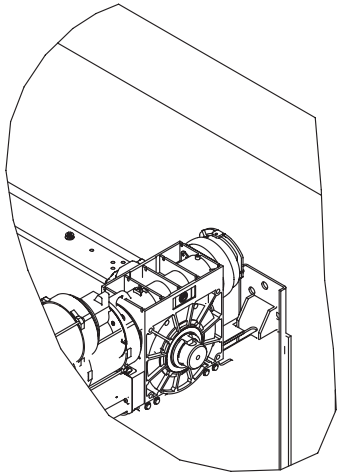

10" DRUM HEADROOMS AND CLEARANCES					
OH	AW Windlock/ 2-4 slats	HR (2xAW+200)	AL (AW+200)	A = B (OH+AL+152)	BR (2AW-30)
2000	235	670	435	2587	440
3000	260	720	460	3612	490
4000	284	768	484	4636	538
5000	292	784	492	5644	554
6000	306	812	506	6658	582
7000	315	830	515	7667	600
8000	327	854	527	8679	624
9000	347	894	547	9699	664
10000	350	900	550	10702	670

12" DRUM HEADROOMS AND CLEARANCES					
OH [M]	AW Windlock/ 2-4 slats	HR (2xAW+200)	AL (AW+200)	A = B (OH+AL+152)	BR (2AW-30)
2	261	722	461	615	492
3	286	772	486	641	542
4	287	774	487	643	544
5	306	812	506	663	582
6	325	850	525	683	620
7	330	860	530	689	630
8	348	896	548	708	666
9	349	898	549	710	668
10	355	910	555	717	680
11	361	922	561	724	692
12	369	938	569	733	708
13	390	980	590	755	750
14	404	1008	604	770	778
15	414	1028	614	781	798

Index	Part No-	Description	Qty
17	RS0509-DD	DRUM CURTAIN ROLLED	1
16	RS0053-1	ROLLFORMER	2
15	RS0-DD	WALL OPENING	1
14	GFA-AU80024	PILLOW BEARING 80MM	1
13	GFA-40016189	BRACKET 29KN GFA	2
12	GFA-40012396	BRACKET GFA 12kN	2
11	FW0107	WASHER MUDGUARD 5/8"x50O.D.x3 ZnPl	1
10	FW0106	WASHER SPRING M22x41ODx4 H-DUTY	4
9	FW0105	WASHER FLAT M22x44x3.5 ZnPl	5
8	FW0102	WASHER FLAT 5/8"x32OD2x2 ZnPl	2
7	FW0100	WASHER SPRING 5/8"X29X4 H-DUTY ZP	5
6	FN0103	NUT M16x2 GRADE 8 ZnPl	3
5	FN0102	NUT M22x2.5 GRADE 8 ZnPl	2
4	FM0110	HORSE SHOE RETAINER (DIRECLIFT)	1
3	FM0104	PIPE RETAINER GENERICS	1
2	FB0108	BOLT M22x2.5x90 HEX-HD-BOLT GRADE 8	2
1	FB0103	BOLT M16x2x70-HEX-HD GRADE 8	2

NOTE: All dimensions shown represent the **minimum recommended** clearances. If the head room dimension (H) is less than the given amount, the bottom rail of the door will intrude into the opening by the difference. (All values in mm)

important information on fasteners

The installer must select the appropriate fasteners to suit the type of structure and dynamic loads that will be applied to them.

2.11 set up details for direct lift direct drive no-windlock

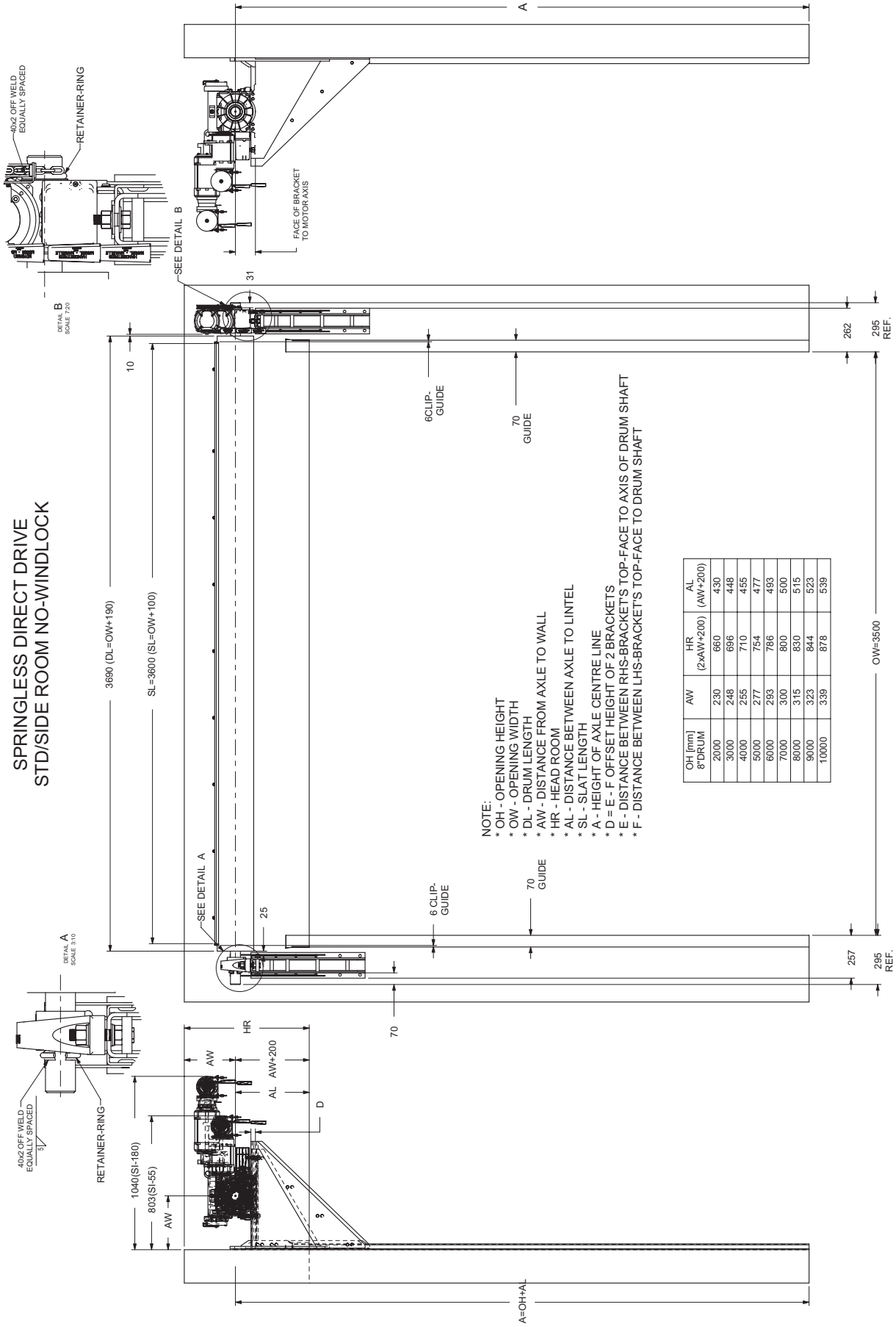

OH [mm] 8"DRUM	AW	HR (2xAW+200)	AL (AW+200)
2000	230	660	430
3000	248	696	448
4000	255	710	455
5000	277	754	477
6000	293	786	493
7000	300	800	500
8000	315	830	515
9000	323	844	523
10000	339	878	539

important information on fasteners

The installer must select the appropriate fasteners to suit the type of structure and dynamic loads that will be applied to them.

NOTE: All dimensions shown represent the **minimum recommended** clearances. If the head room dimension (H) is less than the given amount, the bottom rail of the door will intrude into the opening by the difference. (All values in mm)

SPRINGLESS DIRECT DRIVE (8" HEAVY)

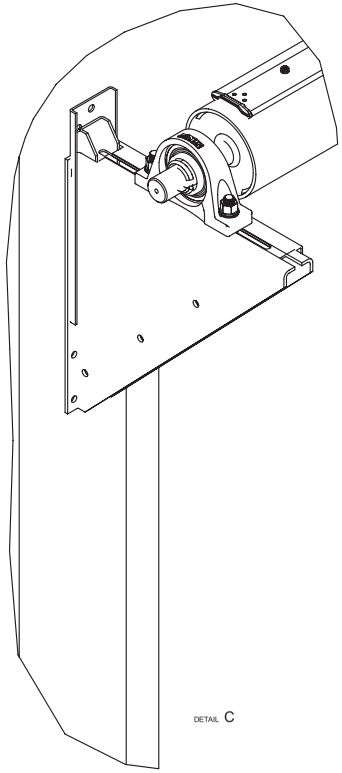

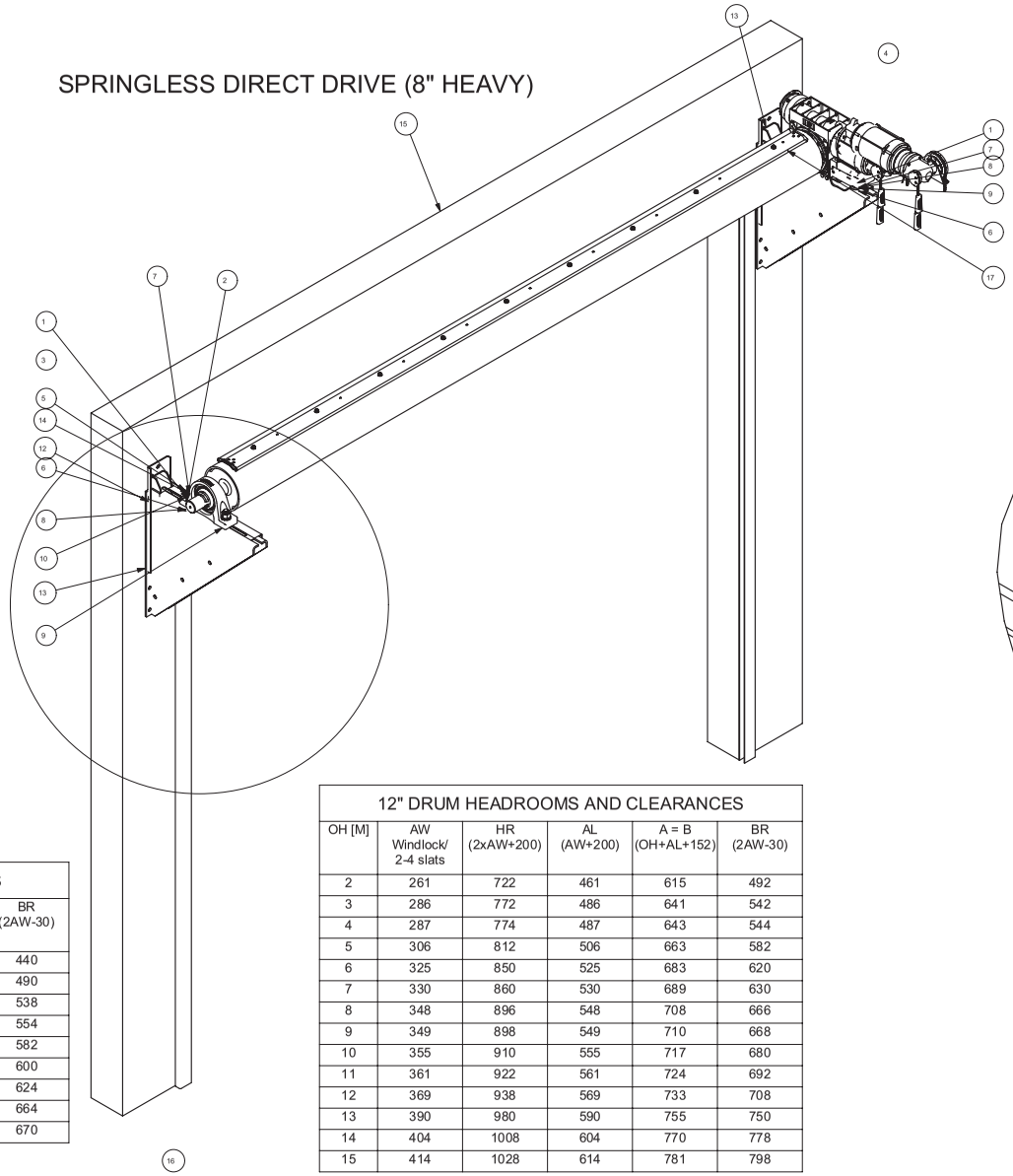

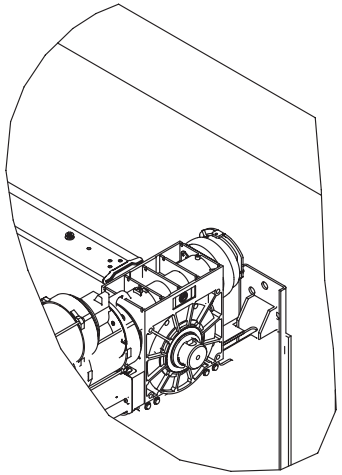

10" DRUM HEADROOMS AND CLEARANCES					
OH	AW Windlock/ 2-4 slats	HR (2xAW+200)	AL (AW+200)	A = B (OH+AL+152)	BR (2AW-30)
2000	235	670	435	2587	440
3000	260	720	460	3612	490
4000	284	768	484	4636	538
5000	292	784	492	5644	554
6000	306	812	506	6658	582
7000	315	830	515	7667	600
8000	327	854	527	8679	624
9000	347	894	547	9699	664
10000	350	900	550	10702	670

12" DRUM HEADROOMS AND CLEARANCES					
OH [M]	AW Windlock/ 2-4 slats	HR (2xAW+200)	AL (AW+200)	A = B (OH+AL+152)	BR (2AW-30)
2	261	722	461	615	492
3	286	772	486	641	542
4	287	774	487	643	544
5	306	812	506	663	582
6	325	850	525	683	620
7	330	860	530	689	630
8	348	896	548	708	666
9	349	898	549	710	668
10	355	910	555	717	680
11	361	922	561	724	692
12	369	938	569	733	708
13	390	980	590	755	750
14	404	1008	604	770	778
15	414	1028	614	781	798

Index	Part No-	Description	Qty
17	RS0509-DD	DRUM CURTAIN ROLLED	1
16	RS0053-1	ROLLFORMER	2
15	RS0-DD	WALL OPENING	1
14	GFA-AU80024	PILLOW BEARING 80MM	1
13	GFA-40016189	BRACKET 29KN GFA	2
12	GFA-40012396	BRACKET GFA 12kN	2
11	FW0107	WASHER MUDGUARD 5/8"x50O.D.x3 ZnPl	1
10	FW0106	WASHER SPRING M22x41ODx4 H-DUTY	4
9	FW0105	WASHER FLAT M22x44x3.5 ZnPl	5
8	FW0102	WASHER FLAT 5/8"x32OD2x2 ZnPl	2
7	FW0100	WASHER SPRING 5/8"X29X4 H-DUTY ZP	5
6	FN0103	NUT M16x2 GRADE 8 ZnPl	3
5	FN0102	NUT M22x2.5 GRADE 8 ZnPl	2
4	FM0110	HORSE SHOE RETAINER (DIRECLIFT)	1
3	FM0104	PIPE RETAINER GENERICS	1
2	FB0108	BOLT M22x2.5x90 HEX-HD-BOLT GRADE 8	2
1	FB0103	BOLT M16x2x70-HEX-HD GRADE 8	2

NOTE: All dimensions shown represent the **minimum recommended** clearances. If the head room dimension (H) is less than the given amount, the bottom rail of the door will intrude into the opening by the difference. (All values in mm)

important information on fasteners

The installer must select the appropriate fasteners to suit the type of structure and dynamic loads that will be applied to them.

2.12 set up details for direct lift chain drive windlocked drums

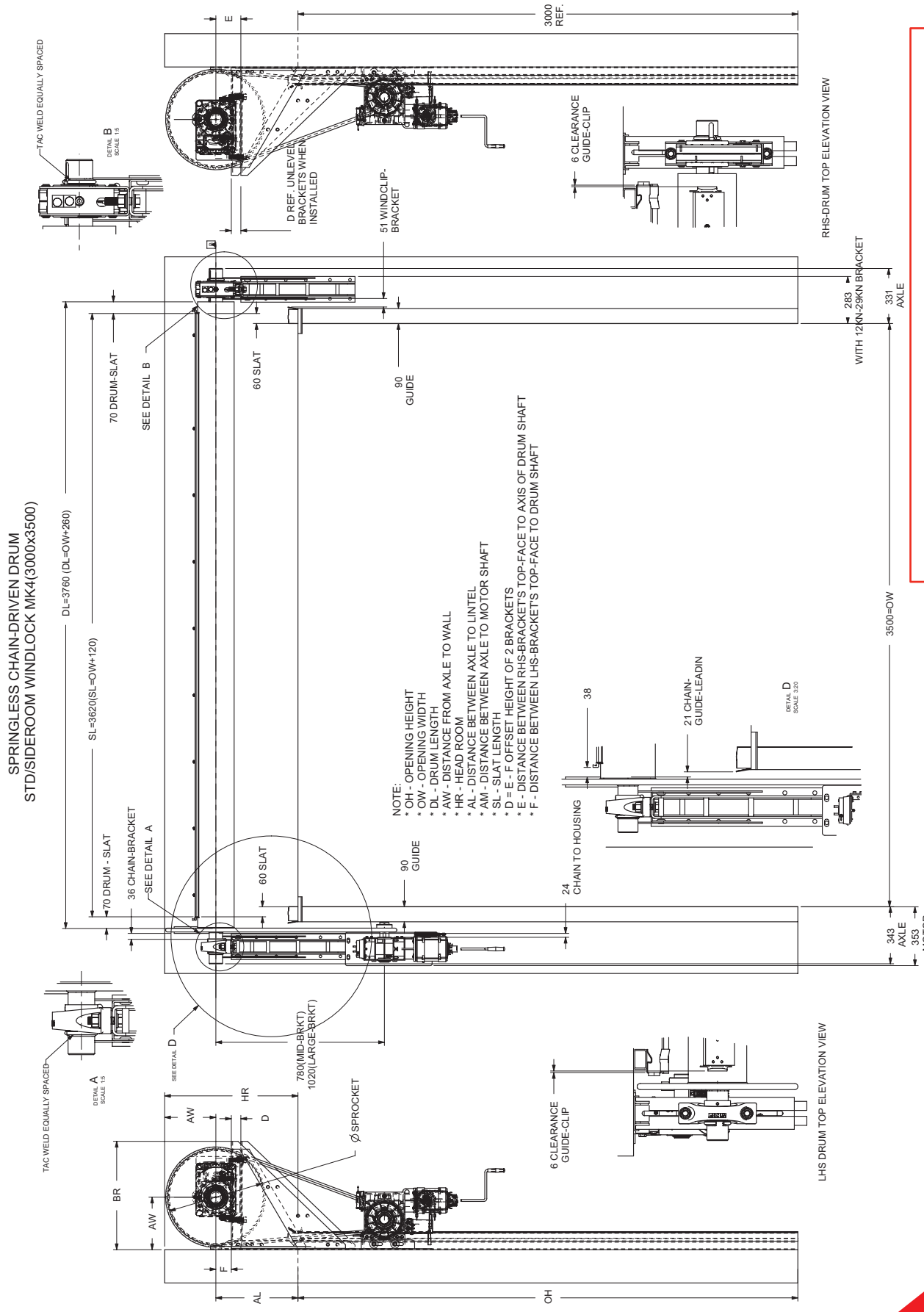

important information on fasteners

The installer must select the appropriate fasteners to suit the type of structure and dynamic loads that will be applied to them.

NOTE: All dimensions shown represent the **minimum recommended** clearances. If the head room dimension (H) is less than the given amount, the bottom rail of the door will intrude into the opening by the difference. (All values in mm)

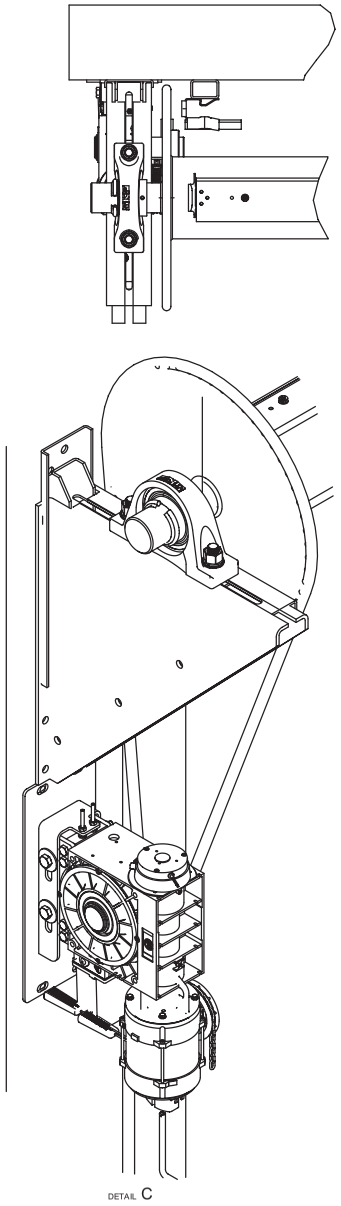

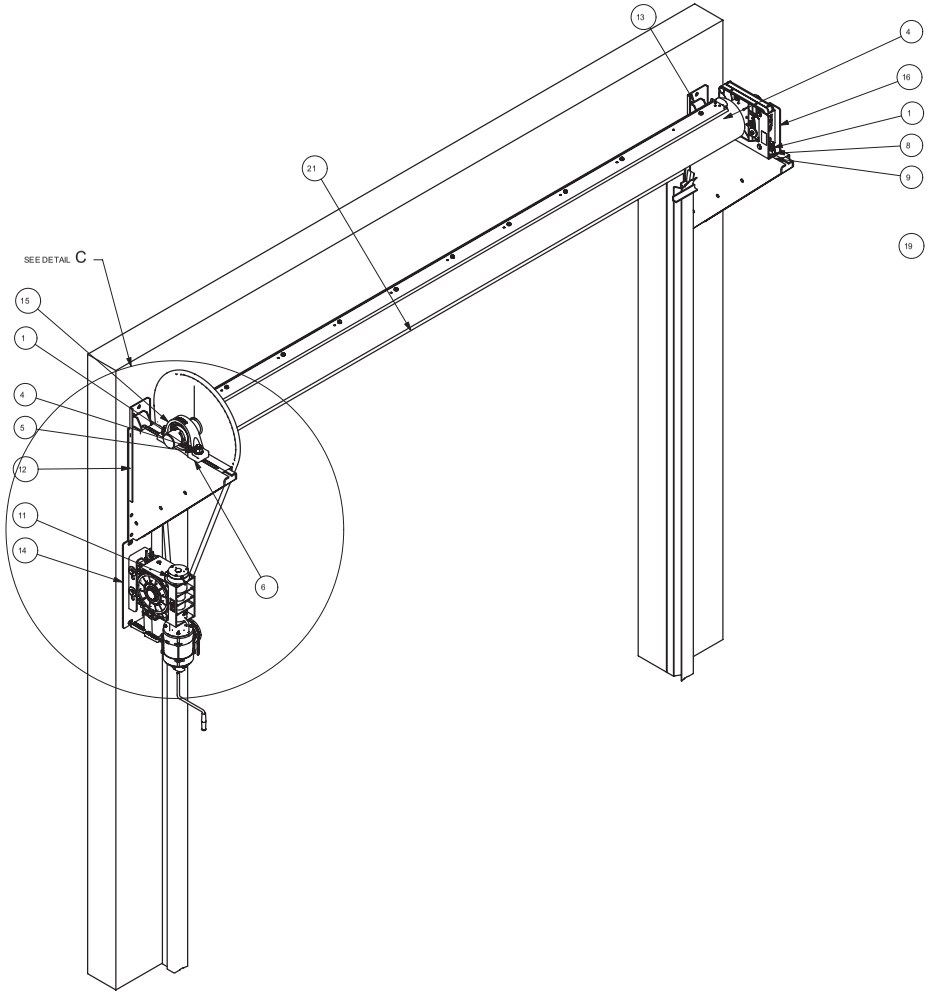

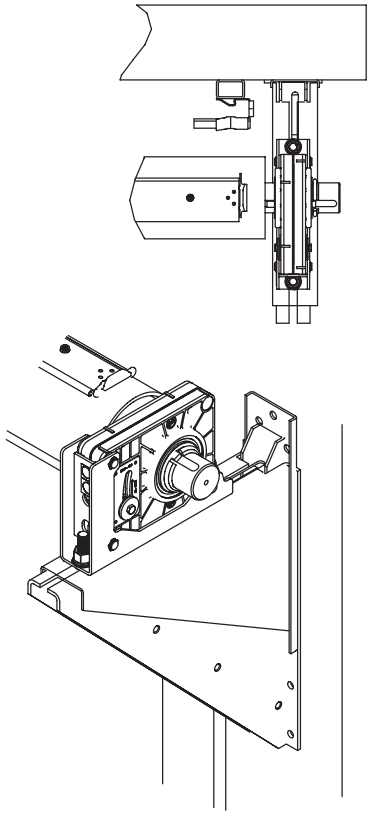

Index	Part No-	Description	Qty
21	RS0XXX	WALL OPENING	1
20	RS054XX	CHAIN GUARD RAS CHAIN DRIVEN DIRECLIFT	2
19	RS0509X	DRUM CURTAIN ROLLED	1
18	RS0069	ROLLFORM GUIDE LH-BOX-MK4 ASSY	1
17	RS0068	ROLLFORM GUIDE RH BOX MK4 ASSY	1
16	GFA-FG220-360	FG-360-80-SAFETY BRAKE	1
15	GFA-AU80024	PILLOW BEARING 80MM	1
14	GFA-AU220012	KE 600Nm-24RPM-SG115 MOTOR	1
13	GFA-40016189	BRACKET 29KN GFA	2
12	GFA-40012396	BRACKET GFA 12kN	2
11	GFA-3000173	SPROCKET STEEL 57T-16B	1
10	FW0133	WASHER SQ MUDGUARD M12 40X40X5	4
9	FW0129	WASHER SPRING M22	4
8	FW0127	WASHER MUDGUARD M22x44X3.2 ZP	2
7	FW0116	WASHER FLAT M12X2.7 ZP	2
6	FW0106	WASHER SPRING M22x41ODx4 H-DUTY	4
5	FW0105	WASHER FLAT M22x44x3.5 ZnPl	2
4	FN0102	NUT M22x2.5 GRADE 8 ZnPl	4
3	FM0111	HORSE SHOE RETAINER (DIRECLIFT)	2
2	FB0112	BOLT 1/2"-12-TPIx50-HEX H-DUTY ZP	2
1	FB0108	BOLT M22x2.5x90 HEX-HD-BOLT GRADE 8	4

NOTE: All dimensions shown represent the **minimum recommended** clearances. If the head room dimension (H) is less than the given amount, the bottom rail of the door will intrude into the opening by the difference. (All values in mm)

important information on fasteners

The installer must select the appropriate fasteners to suit the type of structure and dynamic loads that will be applied to them.

2.13 set up details for direct lift chain drive no-windlock

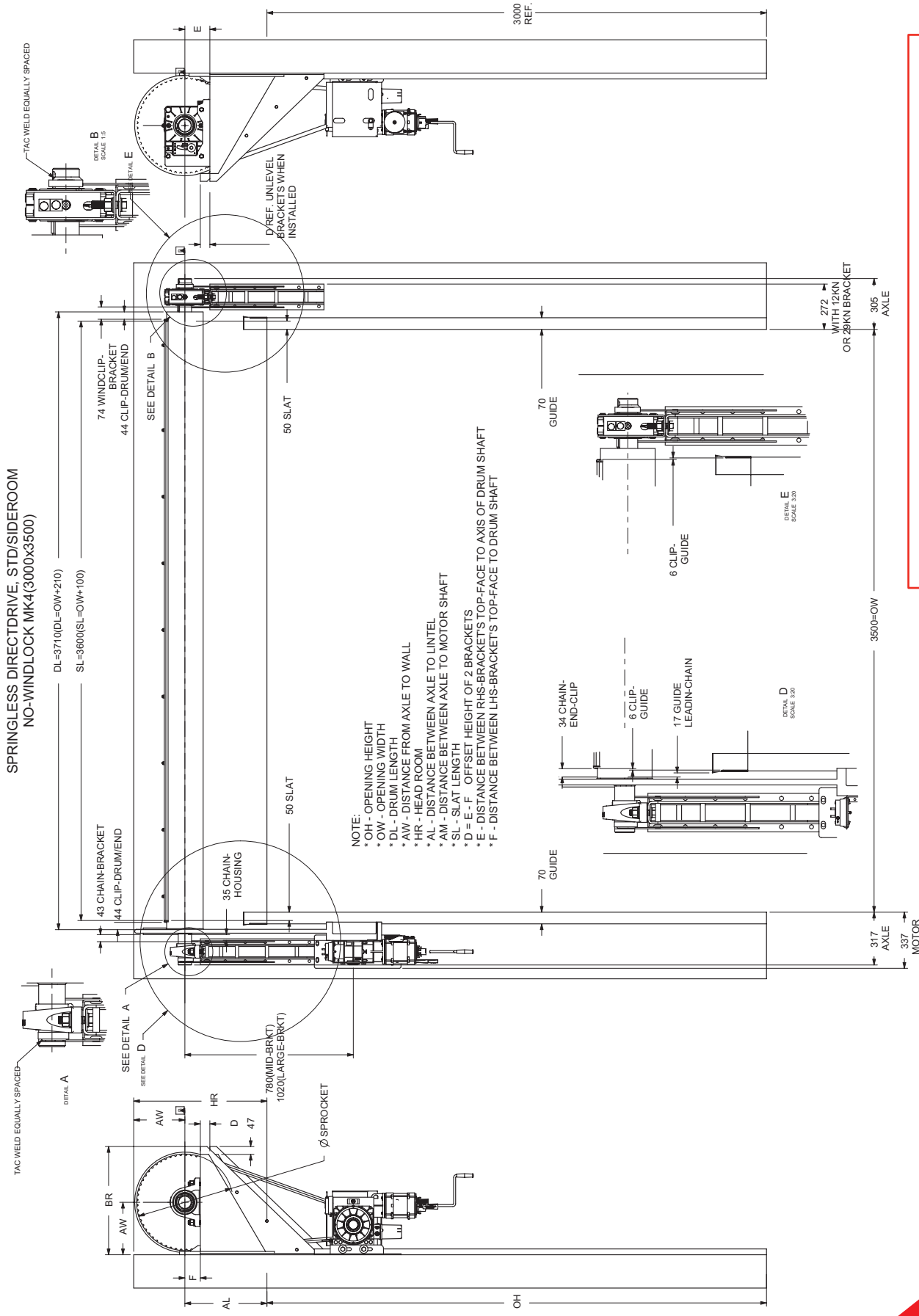

important information on fasteners

The installer must select the appropriate fasteners to suit the type of structure and dynamic loads that will be applied to them.

NOTE: All dimensions shown represent the **minimum recommended** clearances. If the head room dimension (H) is less than the given amount, the bottom rail of the door will intrude into the opening by the difference. (All values in mm)

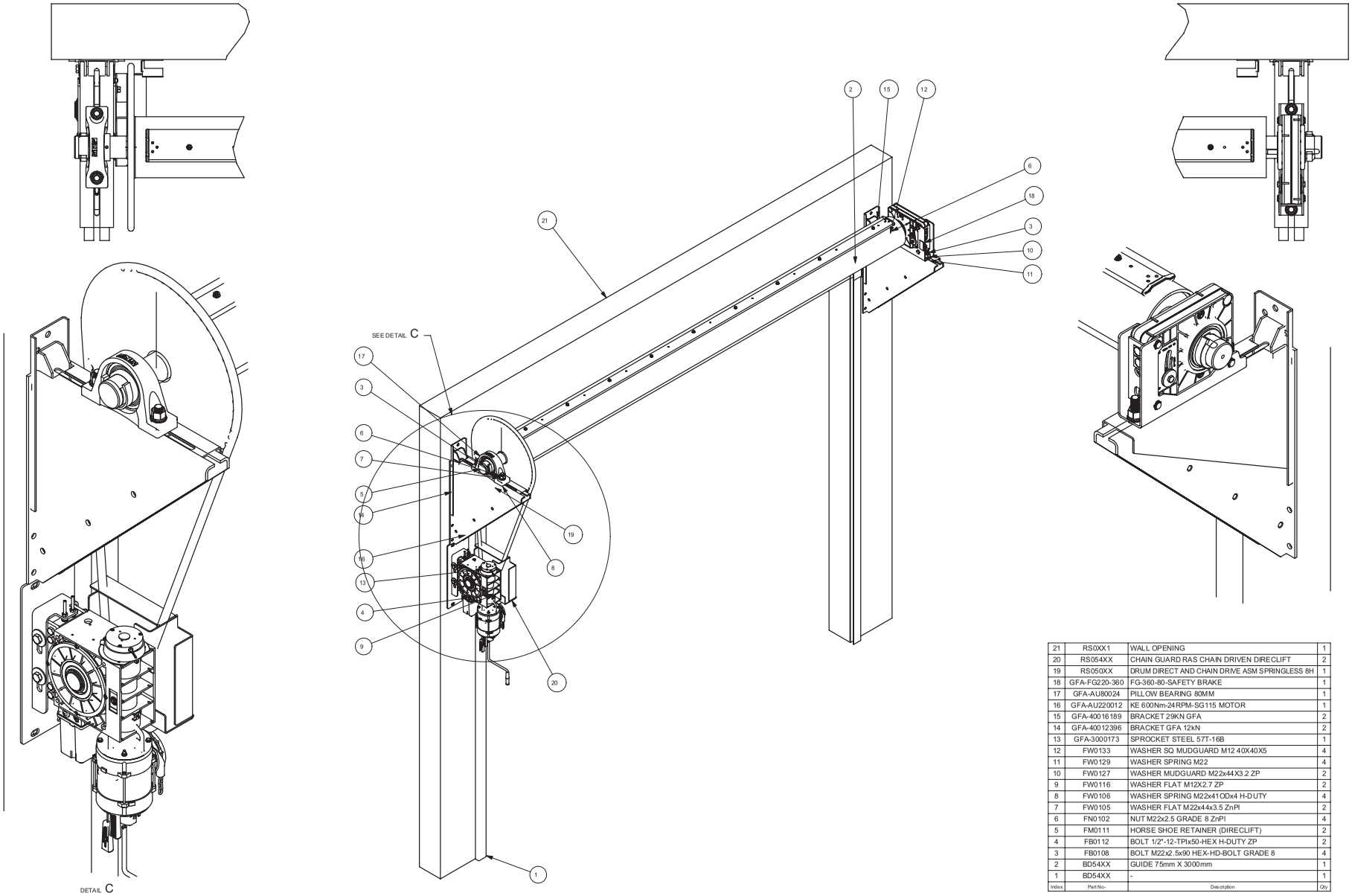

Index	Part No-	Description	Qty
21	RS0XX1	WALL OPENING	1
20	RS054XX	CHAIN GUARD RAS CHAIN DRIVEN DIRECLIFT	2
19	RS050XX	DRUM DIRECT AND CHAIN DRIVE ASM SPRINGLESS 8H	1
18	GFA-FG220-360	FG-360-80-SAFETY BRAKE	1
17	GFA-AU80024	PILLOW BEARING 80MM	1
16	GFA-AU220012	KE 600Nm-24RPM-SG115 MOTOR	1
15	GFA-40016189	BRACKET 29KN GFA	2
14	GFA-40012396	BRACKET GFA 12kN	2
13	GFA-3000173	SPROCKET STEEL 57T-16B	1
12	FW0133	WASHER SQ MUDGUARD M12 40X40X5	4
11	FW0129	WASHER SPRING M22	4
10	FW0127	WASHER MUDGUARD M22x44X3.2 ZP	2
9	FW0116	WASHER FLAT M12X2.7 ZP	2
8	FW0106	WASHER SPRING M22x41ODx4 H-DUTY	4
7	FW0105	WASHER FLAT M22x44x3.5 ZnPl	2
6	FN0102	NUT M22x2.5 GRADE 8 ZnPl	4
5	FM0111	HORSE SHOE RETAINER (DIRECLIFT)	2
4	FB0112	BOLT 1/2"-12-TPIx50-HEX H-DUTY ZP	2
3	FB0108	BOLT M22x2.5x90 HEX-HD-BOLT GRADE 8	4
2	BD54XX	GUIDE 75mm X 3000mm	1
1	BD54XX	-	1

NOTE: All dimensions shown represent the **minimum recommended** clearances. If the head room dimension (H) is less than the given amount, the bottom rail of the door will intrude into the opening by the difference. (All values in mm)

important information on fasteners

The installer must select the appropriate fasteners to suit the type of structure and dynamic loads that will be applied to them.

2.14 setting out and attaching the bearings (direct drive)

Figure 2.14.1: plain end bearing

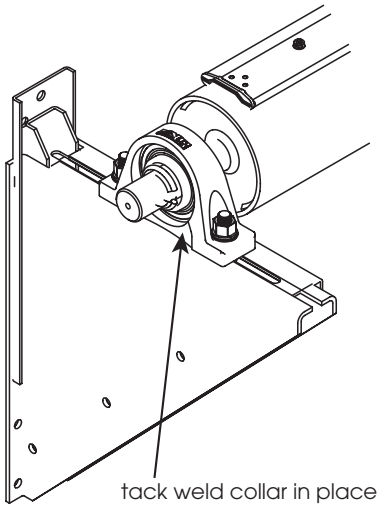

Figure 2.14.2: direct drive

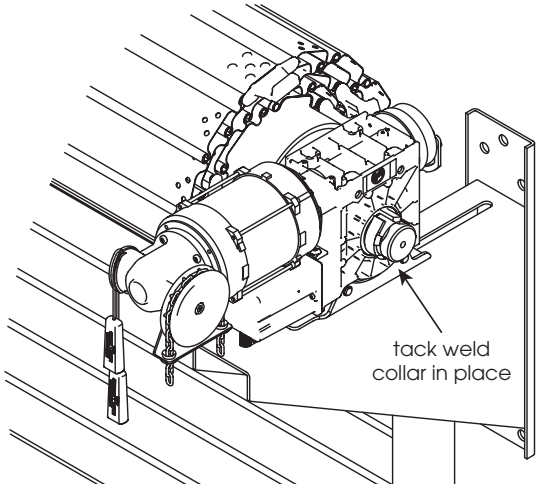

1. Now that the brackets have been selected their positions can be calculated and marked out at each side of the lintel. The relevent schematic drawing detail for this is set out on pages 17 to 23.
2. Using appropriate lifting equipment lift the drum, raise to a comfortable working height of the floor ensuring it is stable as you will need to work at each end to attach the bearings at each end for direct drive chain driven or bearing and opener for direct drive. The drums are none handed and the opener end is only indicated by the sprocket attached to the drum or the keyed shaft for direct drive.
3. The brackets are also non handed and should be placed at each end of the drum.
4. The bearings should be fitted to the axle shafts make sure they are correct to suit the hand of the opener and the bearing is correctly orientated, when satisfied the shaft collars can be tack welded in place.
5. To obtain the angle bracket position measure from the end of the slat to the centre line of the bearing fixing holes. An overall measurement should be made between these centres to confirm the angle bracket position.
6. Using the measurements obtained mark out the curtain to opening overlap on the lintel it must be equal both sides. Using the end of slat to bracket measurements mark the vertical centre line of the fixing points for the angle brackets.
7. Before proceeding further check the overall measurement previously obtained. If this is correct mark a vertical line on the lintel. Calculate the AL position from the label and mark the horizontal line of the axle. **NOTE: IT IS IMPORTANT THAT THE DIRECT DRIVE OPENER BRACKET IS FITTED LOWER than the tail end bracket. (Refer to formula D)**
8. The angle brackets can be welded, bolted or masonry fixed using the correct fixings suitable for the structure and dynamic weights which will be applied to them.

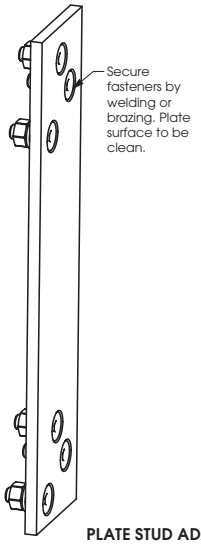

PLATE STUD ADAPTOR ASM FOR 5kN BRACKET

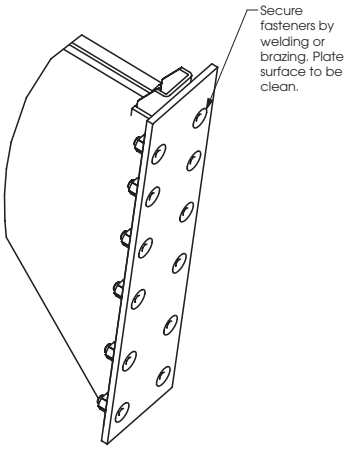

PLATE STUD ADAPTOR ASM FOR 29kN BRACKET

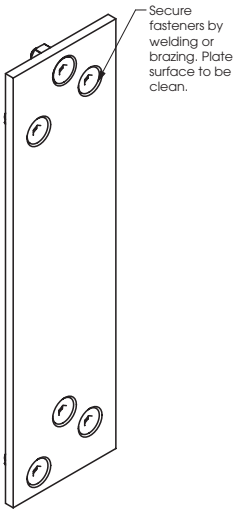

PLATE STUD ADAPTOR ASM FOR 12kN BRACKET

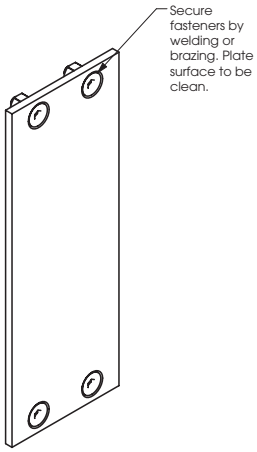

PLATE STUD ASM FOR KE60, KE80, KE120 MOTOR

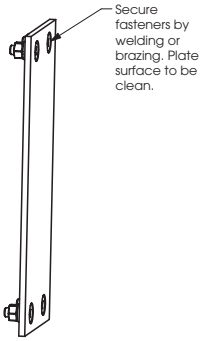

PLATE STUD ASM FOR MOTOR KE40.24

2.15 fitting the chain drive drum

Figure 2.15.1

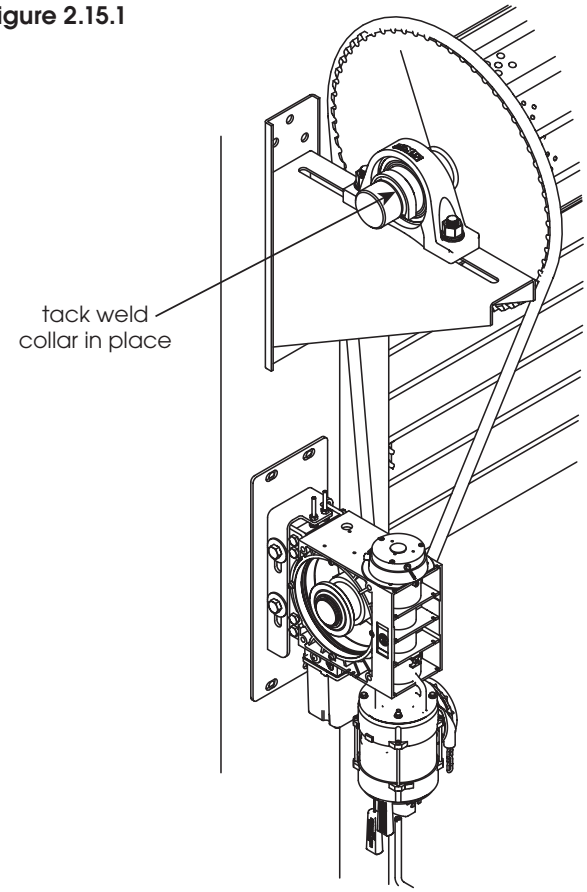

Figure 2.15.2

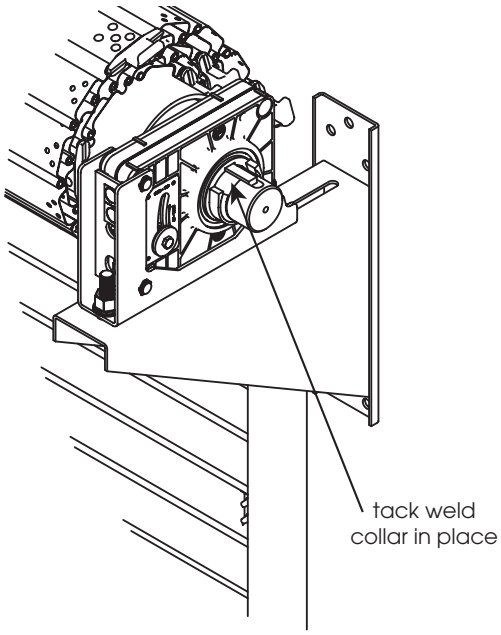

1. The drum/axle is now ready to be prepared for lifting into position, first remove the single slat attached to the drum, and carefully place the slat nuts and washers to one side in a safe place.
2. Using appropriate lifting equipment lift the drum/axle into position in the doorway making sure it is the correct way round and that it is equally aligned to each side jamb.
3. Ensure there is no danger of parts falling from the axle.
4. Now carefully lift the drum up to the height of the previously fitted angle brackets. Adjustment up down or sideways will be required to align the four holes in the bearing housings with the slots in the angle bracket. Fit the bolts washers, spring washers and nuts but do not tighten.
5. Check the X position shown on the label attached to the bracket and adjust the centre of the axle to suit, firmly tighten the four nuts and bolts. **NOTE:** This may require further final adjustment after the door is fully installed.
6. Fit the opener now as it will be required to wind the curtain onto the drum.
7. The small chain sprocket should be fitted but not tightened until the drive chain is fitted, align the sprockets and tension the drive chain and ensure the sprocket grub screws are tightened.
8. Fit the manual chain to the chain wheel.
9. The brake bearing is fitted to the opposite end of the drum to the opener. **NOTE: MAKE SURE THE BRACKET LEVELS ARE CORRECT. (Refer to formula D)**
10. The safety brake must be conected to the opener via a 2core wire (not supplied) to ensure the safety brake operation is active.

2.16 preparing and fitting the curtain

1. The curtain can now be prepared; make sure it is of the ground so that lifting slings or fork lift tines can be fitted under it.
2. Make sure that it is the correct way around with the curtain rolling away from the forklift and the top end slat of the curtain is on the top of the roll.
3. Remove the packaging and strapping around the curtain.
4. Using a screwdriver twist the end clip on the top slat so that the slat previously removed slat can be slid into the top slat. When fully inserted twist the end clip back into position.
5. The bundle of curtain now needs to be secured in a roll as it was in the original packaging, this should be done about a metre from each end using the appropriate ropes wound around 2-3 times. **NOTE:** For doors wider than 5 metres an additional centre rope should be used.

2.17 fitting the curtain to the drum

1. The curtain is now ready to lift into position; the recommended way to lift into position is by overhead crane or by forklift. Whichever is used ensure adequate protection is placed around the curtain as it can easily be damaged. If using the crane method and a spreader bar is not available ensure the straps are placed as wide apart as possible.
2. Carefully lift to within 300mm under the drum, Figure 2.17.1, by means of two other lengths of heavy gauge rope sling the curtain roll to the drum as shown in the illustration. Make sure the end of the curtain is on top of the roll and able to be raised up.
3. When you are sure the curtain is held securely by several wraps of heavy rope release the lifting straps or forklift slowly allowing the wraps of rope to take the weight of the curtain.
4. By using the hauling chain or opener rotate the drum and unroll the curtain sufficiently to allow the fixing slat to be passed up between the lintel and the drum. Rotate the drum and curtain until the fixing studs on the drum and the curtain fixing slat can be aligned. Secure the hauling chain and fix the curtain to the drum with the studs nuts and washers provided.
5. Release the hauling chain and by means of the chain or opener rotate the drum to roll the curtain fully onto the drum, make sure the bottom rail is at about 5 o'clock. Secure the hauling chain to prevent the drum from turning and tighten the rope slings.
6. The assembly is now ready for tensioning the springs.

Figure 2.17.1

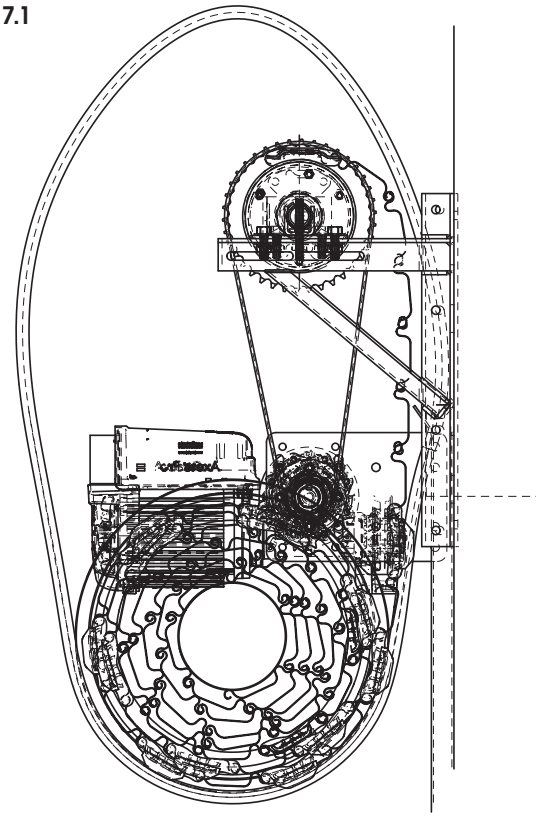

2.18 tension door springs

Figure 2.18.1

With door in open position

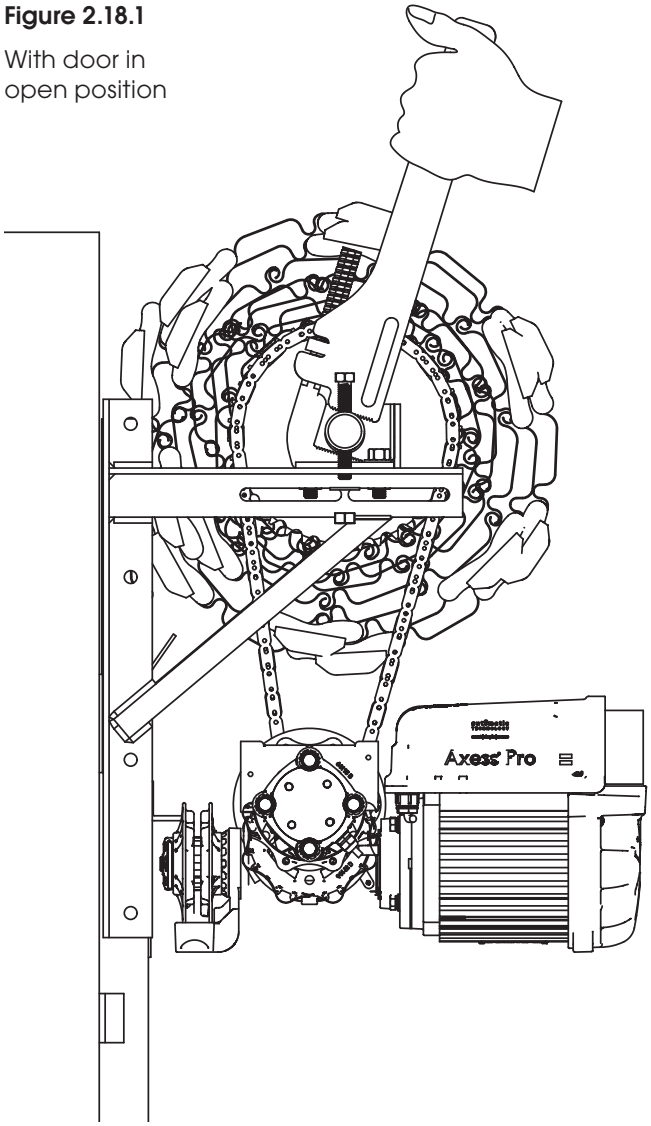

NOTE: Do not use files or similar brittle steel tools. Only mild steel bars must be used.

Tension the door counterbalance springs in the following manner:

a) Ensure that the door is in a fully open position (rolled up) and that the hauling chain is secured to prevent the drum and curtain rotating.

b) With pipe wrench Stillson grip axle securely or insert M.S. tommy bars (min. 450mm long x 12mm dia.) into the holes provided in the plain (non-gear) end of the drum spindle Figure. 2.18.1.

c) With the wrench or bars as levers rotate the spindle in a clockwise (from plain end) direction for a number of turns corresponding with the table below to set the correct spring pretension.

d) Secure the spindle by passing 12mm bolts through the spindle and the angle iron support bracket at both ends. Secure bolts with nuts provided.

Alternatively the drum can be secured in the neutral position and the manual chain or opener used to apply the appropriate pre tension turns.

When satisfied ensure the bottom rail is at 6 o'clock and carefully remove the ropes holding the bundled roll.

NOTE: This table is a guide only.

opening height up to	no turns of drum spring pre-tension
3048	2
3658	2½
4878	3
5486	3¼
6096	3½

2.19 guides installation

Guides must be correct length. The guide stop should be level with the bottom of the lintel for aluminum bottom rail installation and 80mm above if a steel bottom rail is fitted. Guides can be shortened by cutting the bottom of guide. Position guides true and plumb at each side of the opening. Allow 3-5 mm of working clearance between the door and the inside of each guide, mark and fix both guides. Use 10mm bolts (min.) and washers with suitable masonry or other fixings to ensure satisfactory attachment). Drill holes and loosely fix the guides.

Figure 2.19.1: standard 70mm guide installation

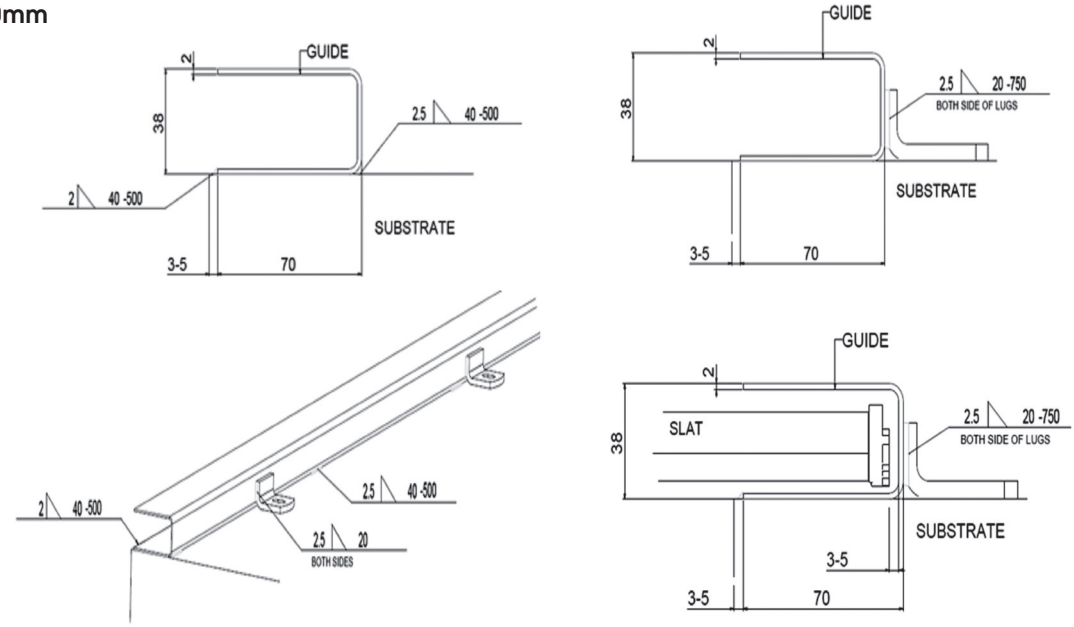

Using the bracket as a template mark out and drill holes in the wall to match the spacing of the fixing bolt holes in the mounting brackets. Fix the bracket with suitable fixings after allowing sufficient side clearance for door curtain. Using a water level (recommended method), transfer position of top of first guide arm to opposite side of opening, then mark, drill and fix second guide. Ensure that the guides are secure.

NOTE: The guides must be perfectly level for correct door operation.

curtain with windlock clips

Where windlock clips are fitted to the curtain a special guide must be used. Position the guides to allow 6mm of working clearance between the windlock clip and the inside of each guide. The guide should be preferably welded on both sides to the steel structure. **Do not fully weld at the moment.** Tack weld guides to the steel work only. If the welding is not possible due to building structure, bolt the attachment lugs welded to the guides as per B&D Roller Shutter Certification drawing S05. Use 10mm bolts (min.) and washers with suitable masonry to ensure satisfactory windlock attachment. Drill holes and loosely fix the guides.

FIGURE 2.19.2: standard windlocked guide installation

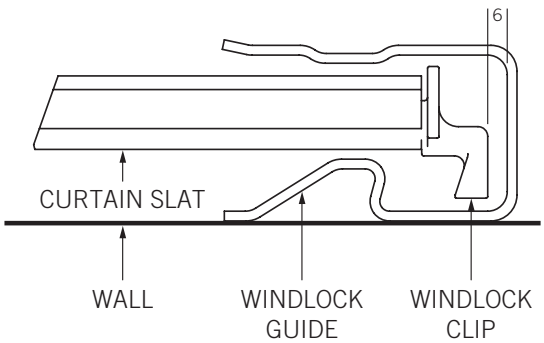

FIGURE 2.19.3: back jamb windlocked guide installation

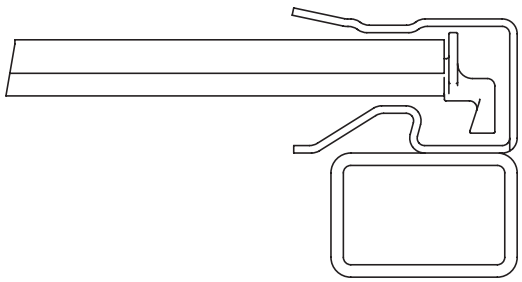

NOTE: Guides should have general purpose grease applied to the internal surface.

3.0 after installation care

general care of your Roll-A-Shutter®

cleaning

Your B&D Roll-A-Shutter® has been manufactured from galvanised or colorcoated steel, which is one of the best paint films commercially available today. However, all exposed surfaces require some attention to guard against the premature onset of corrosion and any other harmful atmospheric effects. In our atmosphere there are harmful deposits that gather on the door surface and if not removed regularly, will seriously affect the appearance and life of the door.

Note: Be aware of electric shock.

Washing of the door with clean water and a cloth is recommended – particular care should be taken to clean areas of the door not normally washed by rain.

lock

Your lock does not require special maintenance, however, if the mechanism becomes stiff, the application of a suitable lubricant is advised.

regular maintenance required

B&D recommends that you check the operation of your Roll-A-Shutter® at least every six months (more regularly in extreme environments or frequent use). The effort required to manually open and to manually close the door should be about the same (if door has an automatic opener, put into manual mode before testing door).

Note: The door guide grease should be cleaned out and replaced least annually or more frequently in extreme conditions.

If the door is difficult to operate in either direction (up or down) then check that the inside surfaces of the guides are clean and free of obstructions.

If the door is still difficult to operate, then your door will need a service to adjust the spring tension and possibly other operational parts of the door.

This service should only be carried out by an experienced door technician, using the correct tools.

If you have an automatic opener fitted to your door, it is particularly important that you ensure the optimum operation of the door, otherwise you may reduce the effective life of the opener.

To keep your door running well, it is recommended that your door be serviced, by an experienced door technician, every 12 months (more regularly in extreme environments or frequent use), or earlier if required.

spring tension

It is natural for springs to lose tension over time. When spring tension is adjusted or when your door is first installed it is usual to apply a little more tension than is required for balanced operation, to allow for the normal "settling in" of the springs.

WARNING: The springs on the door are under extreme tension. On NO account should they be adjusted by an inexperienced person. B&D recommends regular servicing and safety checks be carried out at least annually, more frequently in extreme conditions or in high use environments.

warranty

B&D Roll-A-Shutter® is covered by a 12 month warranty for complete door and parts, surface (excludes salt corrosion).

Warranty conditional on proper care as recommended above. Full details of the warranty are available from **www.bnd.com.au**

b&d doors office locations

New South Wales	34 Marigold St, Revesby 2212	Phone (02) 9722 5555
Queensland	17 Oasis Court, Clontarf 4019	Phone (07) 3883 0200
Newcastle	Unit 1/108 Mitchell Rd, Cardiff 2285	Phone (02) 4956 8533
Victoria	147-153 Canterbury Rd, Kilsyth 3137	Phone (03) 9237 7766
South Australia	23 Frederick Rd, Royal Park 5014	Phone (08) 8440 4747
Western Australia	96 Mulgul Rd, Malaga 6090	Phone (08) 9247 8777
International/Export	34 Marigold St, Revesby 2212	Phone +61 (0)2 9722 5555

your representative is